art. 13021
CITYCOLOR LED RGBW/FC

Studio Due

emotion and creativity in light

- Same light output of traditional Citycolor
- 1/3 of its power consumption
- 1/3 of its weight
- Up to 65° wide beam angle
- Small and lightweight

The CITYCOLOR LED is an high powerful LED lighting fixture, designed with unique features and is available in RGBW/full color version.
The product is suitable for applications where a powerful and large light output is required. With more than 40.000 lumens the compact CITYCOLOR LED is particularly useful for lighting hire companies for use on tours, festivals, large events, in theatres and for film and TV studios productions. The product incorporates all the features of its historicaly famous predecessor, the CITYCOLOR, but has several key advantages due to the cutting edge "Flicker Free on camera" LED technology and renewed streamlined aesthetics.

- Standard fixture colour finishing is black. Optional grey and white (art. FX-COLOUR).

TECHNICAL FEATURES

- **SOURCE**
  n. 120 RGBW (20W) LEDs
  580W total light power
  more than 45000lm
- **OPTIC**
  Square Open (20°x30°) 35mm lenses
  On request: - narrow and wide (35 mm lenses)

  Available as accessory:
  - Frame holder (required to mount the barn-door and the anti-glare)
  - 65° plan-filter (kit 2 pcs.)
  - Barn-door with extensions (kit 4 pcs.)
  - Anti-glare (kit 2 pcs.)
- **TILT**
  Manual 240°
  2 adjustable light blocks +9° each
- **CONTROL**
  Standard interface: RS-485, optocoupled input
  Protocol: USITT DMX512
- **CONNECTIONS**
  Signal: 4pin IP 67 connector (male-female)
  Main Power: 3x1mm cable

  Available as accessories:
  - XLR 3/5pin+Powercon in-out box
  - Wireless DMX receiver
- **SAFETY**
  n. 4 eyebolts for safety chains
- **RATING PROTECTION**
  IP 64
- **SETUP AND CONFIGURATION**
  Control panel with touch technology
  Led display with flip function
  Dedicated DMX channel for white balance
  DMX or Auto mode with Master-Slave function
  Intelligent temperature control
  Flicker-free function
  Smooth dimming function
  Halogen simulation
  CYM simulation
- **DMX CHANNELS**
  - 9CH mode
  - 5CH mode
  - 4CH mode
- **POWER SUPPLY**
  Voltage range: 88-264VAC, 124-370VDC
  Frequency range: 47-63Hz
  Active Power factor: PF>0.95/230VAC, PF>0.98/115VAC
  Current: 2.6A@230VAC; Fuse T10A
  Power: 600W
- **PHYSICAL**
  WxDxH: 680x145x640 mm
  Weight: 32 Kg.

Click on the QR Code with your smartphone to go directly to the fixture website page

art. 13021
CITYCOLOR LED RGBW/FC

Studio Due
emotion and creativity in light

PHYSICAL

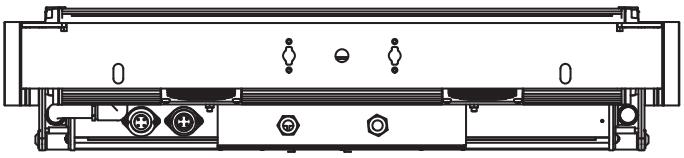

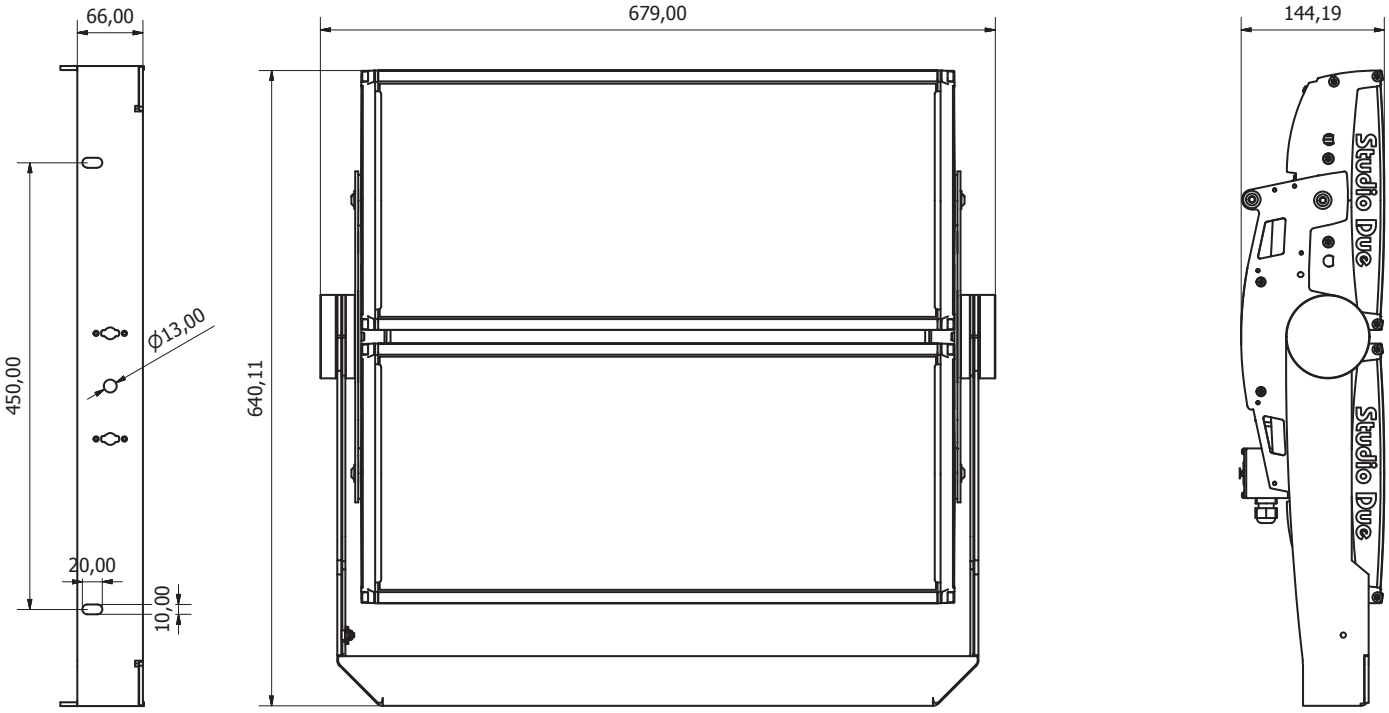

© Copyright 2014 **Studio Due light** srl
Strada Poggino, 100
01100 Viterbo (Italy)
tel. +39.0761.352520 (4 lines)
fax +39.0761.352653
C.F. e P. IVA 05793121004

Specifications are subject to change without notice. Trademarks are the property of Studio Due Light Srl
www.studiodue.com