art. 1525
T-BRIGHT 500 RGBW/FC

Studio Due
emotion and creativity in light

RGBW FC

T bright

The new T- BRIGHT family is a new series of small form factor, compact and lightweight wall washers line, designed to minimize the dimensions of a LED lighting fixture keeping an high level of lumen package in a very compact design.
The T-BRIGHT 500 RGBW/FC is particularly adapt for temporarily events and can also be used easily for permament installations.

• Standard fixture colour finishing is black. Optional grey and white (art. FX-COLOUR).

TECHNICAL FEATURES

- **SOURCE**
  n. 30 RGBW-FC High Power LEDs
  340W total light power
  Red 3300lm, Green 4700lm, Blue 900lm, White 6200lm
- **OPTIC**
  25° (45mm lenses)
  On request:
  - narrow, wide, elliptic 45mm lenses
- **TILT**
  Manual 160°
- **CONTROL**
  Standard interface: RS-485, optocoupled input
  Protocol: USITT DMX512
- **CONNECTIONS**
  Signal: XRL 5pin (on request 3pin) IP 64 connector (male-female)
  possibility to link up to 32 devices in chain
  Available as accessories:
  - Wireless DMX receiver
  Main Power: POWERCON 3pin IP 64 connector (male-female)
  possibility to link up to 6 devices at 230V or 3 devices at 120V in chain.
- **SETUP AND CONFIGURATION**
  Control panel with touch technology and led display with flip function
  or by DRS (remote control device)
  Dedicated DMX channel for white balance
  DMX or Auto mode with Master-Slave function
  Intelligent temperature control
  Halogen simulation
  CYM simulation
  Flicker-free function
  Smooth dimming function
- **RATING PROTECTION**
  IP 64
- **DMX CHANNELS**
  - 9CH mode
  - 6CH mode
  - 5CH mode
  - 4CH mode
- **POWER SUPPLY**
  Voltage range: 100-240VAC
  Frequency range: 47-63Hz
  Active Power factor:
  PF>0.92/230VAC, PF>0.94/120VAC
  Current:
  1.65A@230VAC, 3.2A@120V 370W
  Fuse T8A (inside fixture)
- **PHYSICAL**
  WxDxH: 406x185x398 mm
  Weight: 13 Kg.

Click on the QR Code with your smartphone to go directly to the fixture website page

Studio Due
emotion and creativity in light

PHYSICAL

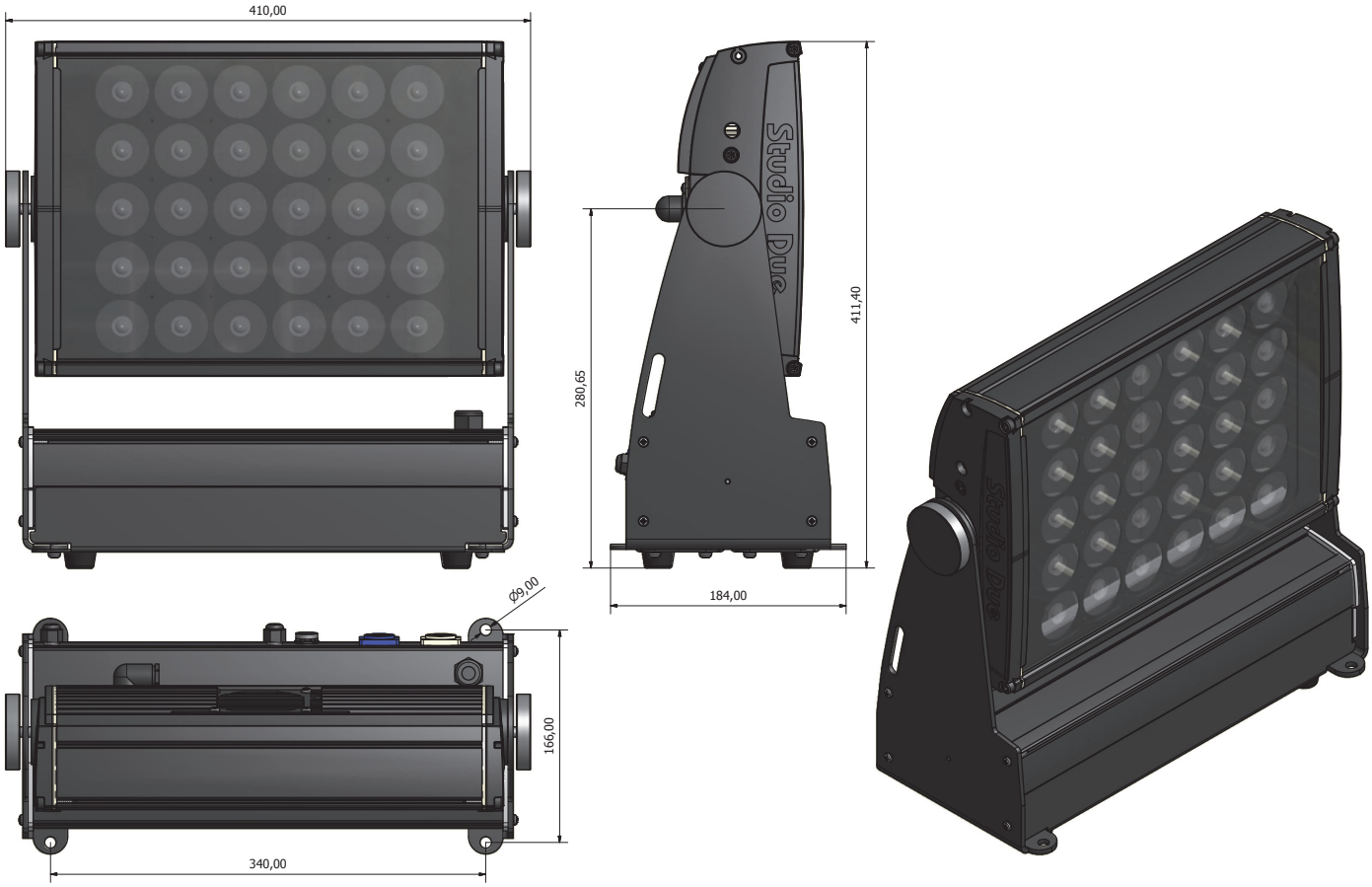

© Copyright 2014 **Studio Due light** srl
Strada Poggino, 100
01100 Viterbo (Italy)
tel. +39.0761.352520 (4 lines)
fax +39.0761.352653
C.F. e P. IVA 05793121004

Specifications are subject to change without notice. Trademarks are the property of Studio Due Light Srl
www.studiodue.com