MiniACE 24

Product Datasheet

MiniACE is the smallest member of D-leds LED engine family. It's small size, 3 RGB channels makes it ideal for use when facing small scale instalations.

MiniACE is durable, reliable, easy to use, and will fit in tight places, (even drawers), therefore is the first choice for many restaurants, shops, bars, and many more**.**

MiniACE encorporates 2 configurations; 350mA / 700mA and will power up to 18 LEDs in 3 channels. It's a self-operated/DMX, RGB controller, Units are programmed via 3 rotary switches that allow choosing from a variety of pre-programmed lighting schemes and steady lighting states. Or via any DMX512 lighting product.

MiniACE enables master/slave mode, providing a cost effective control solution for simple installations.

Key Applications:

- Ambient lighting
- Special effects
- Clubs
- Bars
- Hotels
- Arc lighting

Technical Summary

Dimensions
127mm X 81mm X 46mm
11.7" X 5 X 1.81"

LED power output
Max. 24VDC
Max. 350mA / 700mA per channel

Output
350mA
Max. **18 LEDs** 1 output - total 3 channels
700mA
Max. **18 LEDs** 1 output - total 3 channels

Power Input
24VDC
External power supply

Connections
DMX - In/out – RJ11
Output load - RJ45

MiniACE 24

Product Datasheet

Output Specification

Specification	Notes / Conditions	350mA	700mA
Rated output power		Max. 22W	Max. 45W
Output voltage		Max. 24VDC	Max. 24VDC
Efficiency (typ)		85%	85%
Output current tolerance		Max. 5%	Max. 5%
Driving current	Per channel	Max. 350mA	Max. 700mA
Output channels configuration	1 output = 3 channels	1 output total 3 channels	1 output total 3 channels
Channel driving capabilities	350mA = 1W LED 700mA = 3W or HP LED	Min. 1 LED per channel Max. 6 LEDs per channel	Min. 1 LED per channel Max. 6 LEDs per channel
Total driving capabilities		Max. 18 LEDs	Max. 18 LEDs
Load regulation		Max. 1%	Max. 1%
Output resolution	Output curve is optimized for the best visual performance	256 grades (per channel) total 16.7 M grades (each output)	256 grades (per channel) total 16.7 M grades (each output)

Back panel connections

RJ45 Jack Plug

RJ11 Jack Plug

Safety Specifications

Specification	Value
Output	Circuit protection
DMX Protection	Over voltage protection
Compliance	CE FCC cTUVus RoHS

MiniACE 24

Product Datasheet

Environment

Specification	Value
Environment	IP40
Operating Ambient temp.	Range: -18°C ~ +40°C (0°F ~ +104°F)
Storage temp	Range: -18°C ~ +40°C (0°F ~ +104°F)
Humidity	85% RH
Heat dissipation	15% of power output

DMX512 interface

Specification	Value
Control Method	DMX512
DMX working mode	R/G/B – 3- channels
DMX signal input	RJ11 female
DMX signal output	RJ11 female
Loss of input DMX signal	Preserves previous state on all outputs, failure indication via LED
Start codes	Will only respond to NULL START code. Should not be used with other start codes

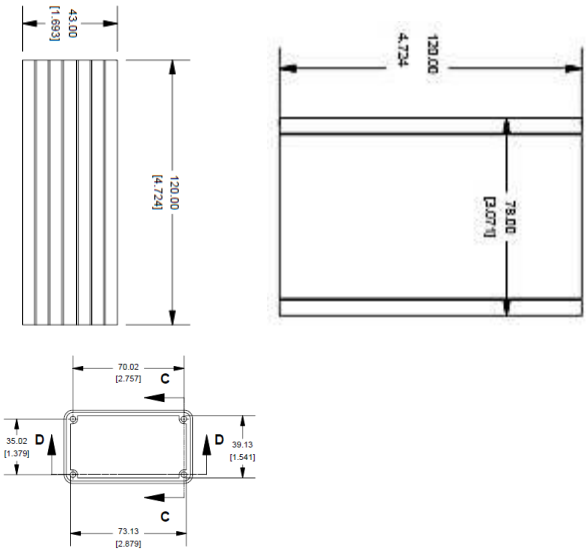

Input Specifications

Specification	Notes / Conditions	Value
Power Supply	External	Class 2
Input Connection	Standard power cord	DC power jack
Input Voltage		24VDC
Current consumption		Max 2.5A
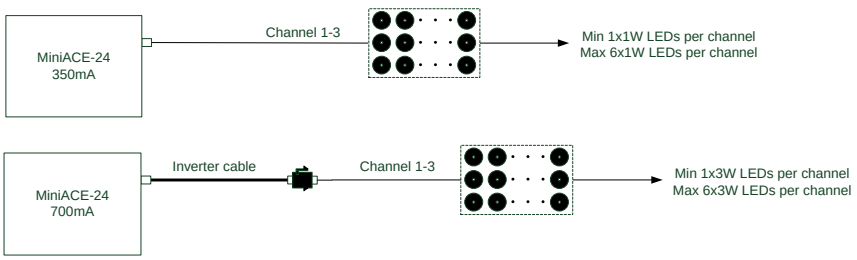
Typical connection diagram