TOUCH PANEL CONTROLLER

SHEPHERDS BUILDING, ROCKLEY ROAD, LONDON W14 0DA, UNITED KINGDOM
pharoscontrols.com

OVERVIEW

The Pharos Touch Panel Controller (TPC) is a lighting controller with a customisable touch screen interface. It incorporates the same advanced playback and show control engine as the Pharos Lighting Playback Controllers (LPC).

Timeline-based programming and show control are configured in the Pharos Designer software and multi-page user interfaces are created in the companion Pharos Interface Editor application. Designer uploads the complete project to the TPC.

The TPC provides one universe (512 channels) of lighting control over multiple eDMX protocols. It can run stand alone, with lighting programming triggered by user interaction with the touch screen and by its internal realtime and astronomical clocks, or it can be used as part of a larger Pharos control system, incorporating additional TPCs, LPCs, AVCs and Remote Devices. When used in tandem with a Pharos LPC 1, the TPC can use the second DMX output of the LPC 1 to output local DMX.

Like the LPC, the TPC features a built-in web server and is fully compatible with Pharos Installation Manager and Pharos Dynamic Media Manager, providing comprehensive remote management solutions.

The wall-mounting design features a magnetic overlay within the sleek, plated bezel to produce a modern, streamlined design. The screen uses capacitive touch sensing technology so only very minimal finger pressure is required for interaction. The TPC is a Power over Ethernet (PoE) device and therefore requires just one cable to install.

The TPC has a learning IR sensor for remote control and IR commands can be associated with touch screen controls. It also has onboard sensors for ambient light, temperature and proximity which can be used locally by the touch screen or by the larger Pharos control system.

KEY FEATURES

- One universe, reliable, fully integrated and remotely managed control solution.
- Touch screen with customisable user interface.
- Programmed and configured using the Pharos Designer software.
- User interface designed using the Pharos Interface Editor application.
- Create multiple pages of controls, with option to inhibit controls for special events.
- Configure control appearance and visual feedback in software.
- Triggering and show control via touch screen, IR, Ethernet, realtime and astronomical clocks.
- Ambient light sensor for daylight harvesting functionality.
- Proximity sensor to wake the display.
- Learning IR sensor for remote control.
- Pixel accurate timeline programming and pixel-mapped media support.
- Algorithmic, realtime playback engine ideally suited to interactive control.
- Use multiple units connected and synchronised over Ethernet to scale to larger installations.
- Integrates with other Pharos Controllers (LPC, LPC X, AVC) and Remote Devices (RIO, BPS).
- Integrated web interface for remote management; custom pages supported.
- Removable SD memory card data storage.
- Solid state, instant-on, fit & forget solution.

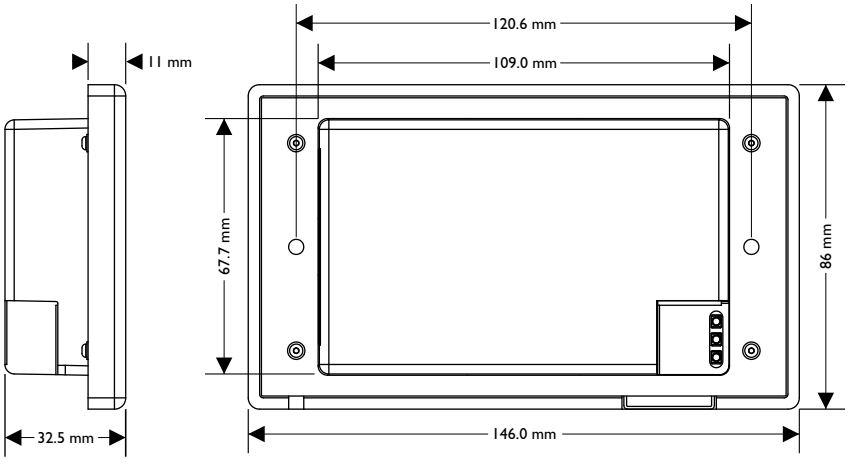

PROTOCOLS

- Art-Net II.
- Philips Color Kinetics KiNet.
- Pathport.
- sACN.

SPECIFICATIONS

General:

- Microprocessor based system specifically designed for the control of lighting in an architectural or entertainment application.
- Capacitive touch screen with customisable user interface, supporting multiple pages of controls and fully integrated with show control to provide visual feedback.
- Built-in learning IR sensor, with ability to associate IR commands with touch screen controls.
- Built-in ambient light sensor for daylight harvesting and to adjust screen brightness.
- Built-in temperature sensor and proximity sensor providing local and system-wide feedback.
- Project data stored in non-volatile solid-state memory, uploaded from a remote personal computer over an Ethernet or web connection.
- Operating System stored in non-volatile solid-state memory, remotely updated when necessary from a personal computer over an Ethernet connection.
- Commences playback automatically on receiving power without additional external trigger.
- Internal realtime clock operates when power is absent.
- Integrated web interface.
- 5 year warranty.

Screen:

- Resolution: 480x272
- Colour depth: 24 bit
- Brightness: 340 cd/m^2

Physical:

- Screen diagonal: 4.3"
- Wall-mounting in back box (UK 2-gang 35mm or custom US 2.5", available separately).
- Configuration and Reset buttons beneath magnetic overlay.
- Operating temperature range 0°C to 50°C (32°F to 122°F).
- **CE** compliant and **ETL/cETL** listed.

Electrical:

- RJ45 socket for 10/100Base-TX Ethernet.
- IEEE 802.3af PoE powered device.*

*Typical power consumption 4W.

Copyright © 2004-11 Pharos Architectural Controls Limited. All rights reserved. Specifications subject to change without notice (03-11-2011).