RESIST

IP67 Linear Light Fixture

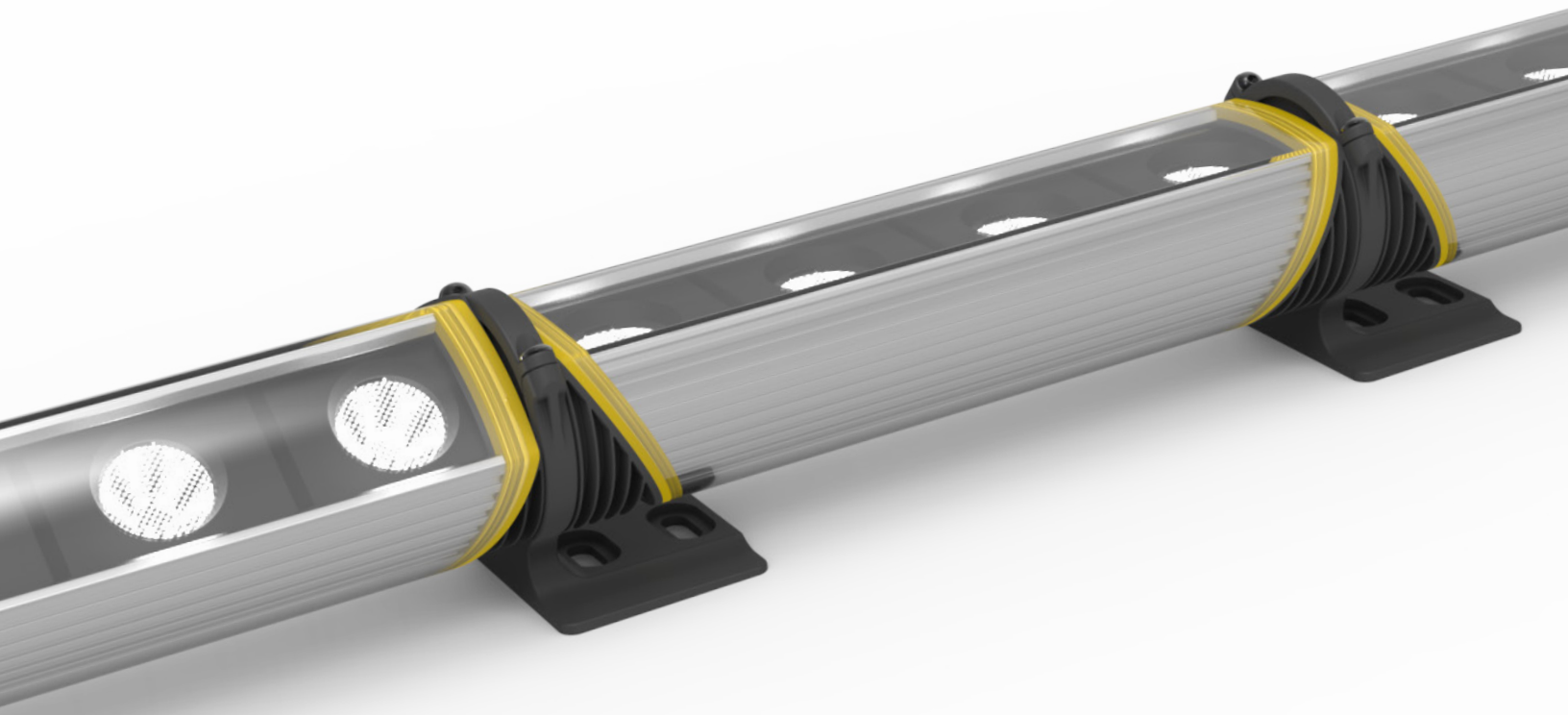

Datasheet APRIL 2014

dled

RESIST

IP67 Linear Light Fixture

RESIST is only 45mm wide (including brackets), 52mm high and designed to fit even the narrowest of niches.

The main body of the ***RESIST*** is made out of high quality bespoke aluminum together with a uniquely designed polycarbonate housing and customized silicon seal for best performance and durability.

The uniquely designed body, together with custom-designed adjustable brackets, enables the ***RESIST*** to be adjusted by 270 degrees (135 degrees to each side) making it very flexible for both the designer and the installer.

The custom-designed brackets allows the ***RESIST*** to be aligned in a straight line, one after the other, for several meters in a precision of millimeters, where each fixture can be adjusted differently yet still keeping it within the same line.

RESIST can be Driver-On-Board (DOB) for monochromatic applications and on\off control, or controlled by a remote driver.

RESIST may be ordered in various lengths, from 170 to 1,500mm, in a range of lenses by Carclo, implementing versatile CCT or colored Philips Lumileds LED arrangements, in 1,3 or 4 channels.

Advanced d-led technology maintains the optimal performance and longevity of the LEDs by controlling their junction temperature with our ATP (Active Thermal Protection) system.

RESIST

IP67 Linear Light Fixture

SPECIFICATIONS

Output

LED Source	High power Luxeon Rebel ES
Channel Range	1, 3 or 4 channels
Color Choice	Warm white, cool white, red, green, blue, amber, RGB, RGBW, RGBA
Optical System	6°, 15°, 25°, 36°, 47x12°

Electrical

Control	DOB - Driver on board / External driver
Input Voltage	DOB - 24V / External - 48V
Power Consumption	Max. 90W with 36 LEDs
Max LED Per Chain	36 LEDs @ 700mA 48 LEDs @ 500mA 72 LEDs @ 350mA
Dimming Option	DOB – 0-10V, PWM* / External – DMX,DALI

* Dimming is available upon request.

Environmental

Operating Temp.	-20°C ~ 40°C / -4°F ~ 104°F
Storage Temp.	0°C ~ 60°C / 32°F ~ 140°F
IP Rating	Outdoor IP67

Physical

Length	Dependent
Width	45mm
Height	52.3mm
Housing	15µ Anodized Aluminum, UV stabilized V0 optical grade polycarbonate
Color	Natural anodized aluminum

Accessories

Attachment	Adjustable 270° nylon 6/6 plastic bracket
Wall Attachment	Uplight / downlight duo metal bracket

RESIST

IP67 Linear Light Fixture

LEDS CONFIGURATIONS

Configuration	4 Channels	3 Channels	3 of 4 Channels	2 of 4 Channels	3 Channels	BIN Option	Optics
	●●●●	●●●●	●●●–	●–●–	●–●–●–		
Length	No. of LEDs	No. of LEDs	No. of LEDs	No. of LEDs	No. of LEDs		
176mm	4		3	2		WW-2700K WW-3000K WW-3500K NW-4000K CW-5600K~ Red Green Blue Amber	6°, 15°, 25° 36°, 47x12°
342mm	8		6	4			
507mm	12	12	9	6	6		
673mm	16		12	8			
838mm	20		15	10			
1004mm	24	24	18	12	12		
1170mm	28			14			
1335mm	32			16			
1501mm	36	36		18	18		

* All 3 channels versions will be available during Q4 2014

CABLES

Physical

Cable Extension	1, 3 meters
Standard Cable Gap	25 cm

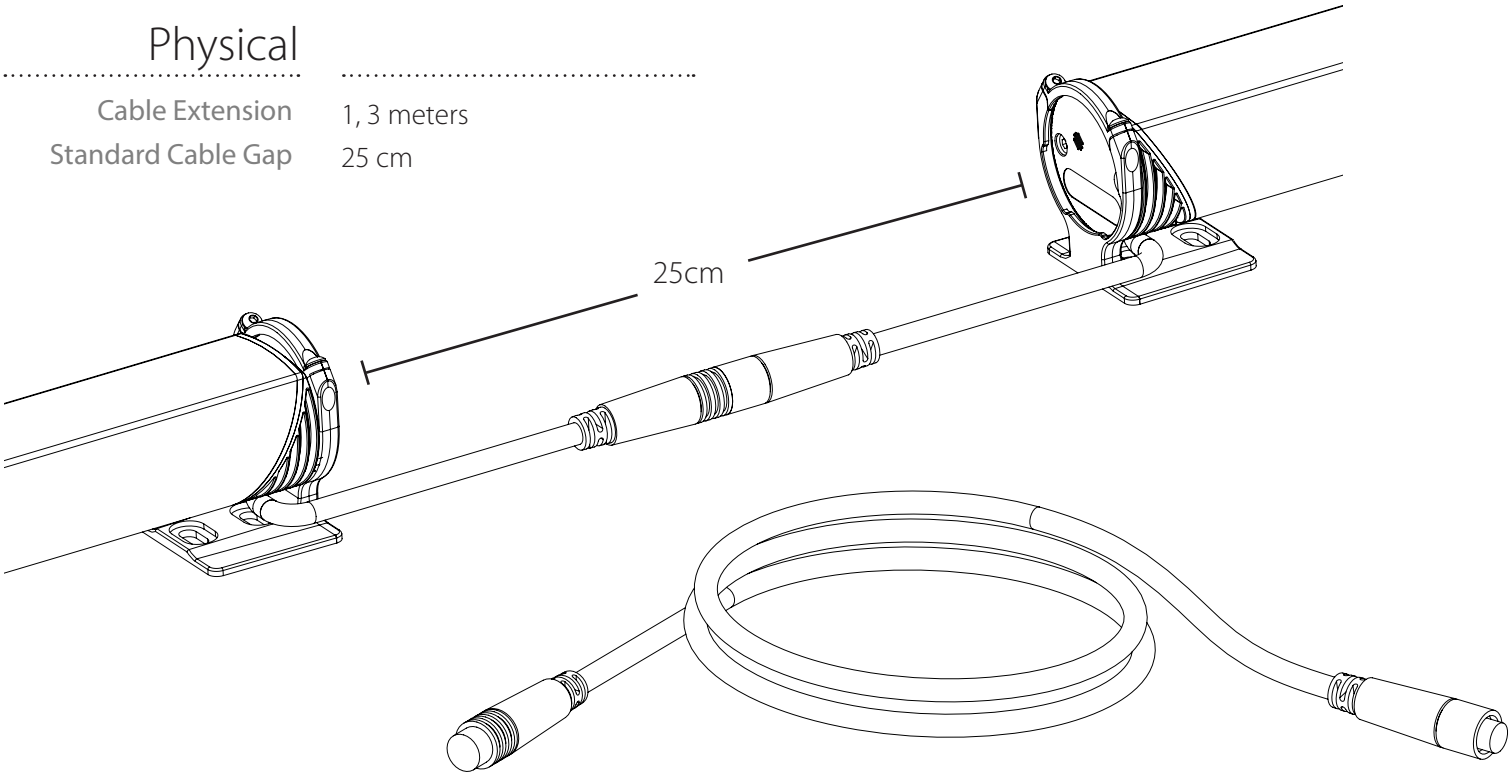

RESIST

IP67 Linear Light Fixture

DRAWINGS

Product drawings

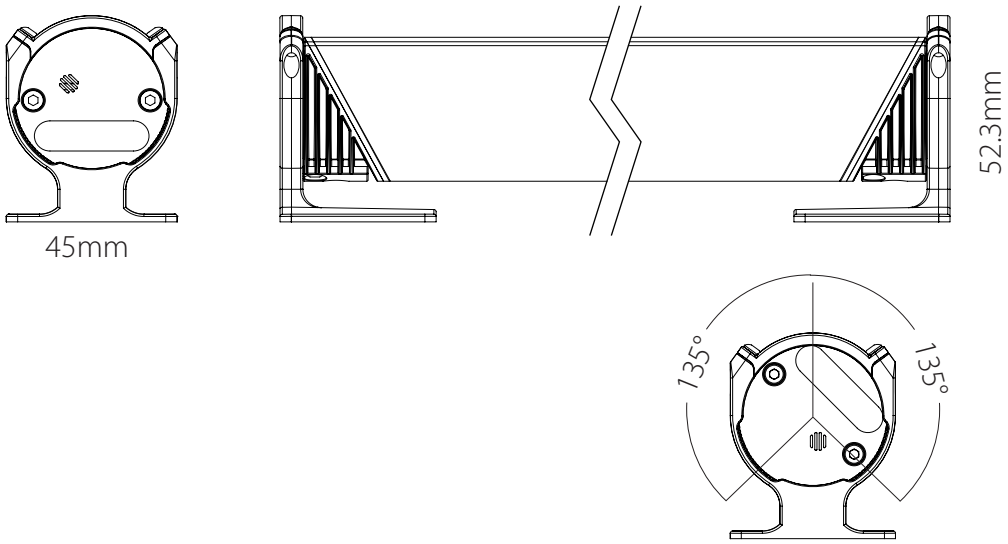

Duo metal bracket

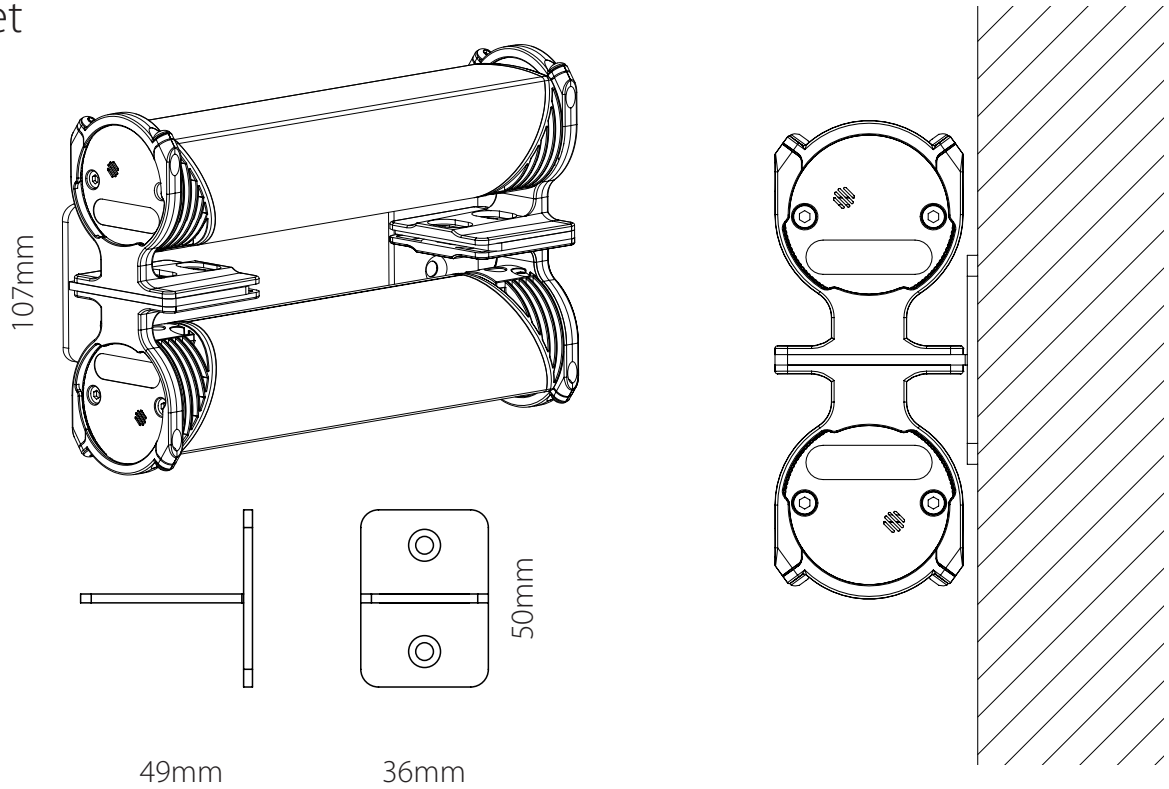

d-led Illumination Technologies | +972 (0)9 7444 222 | www.d-led.net | info@d-led.net

RESIST

IP67 Linear Light Fixture

CONTACT

Head Quarters

d-led Illumination Technologies
T +972 (0)9 7444 222
F +972 (0)9 7696 826

PO. Box 7180
Hod-Hasharon, 4501310
Israel

www.d-led.net
info@d-led.net

United Kingdom

London office
T +44 (0)20 88683163
M +44 (0)7702 124292
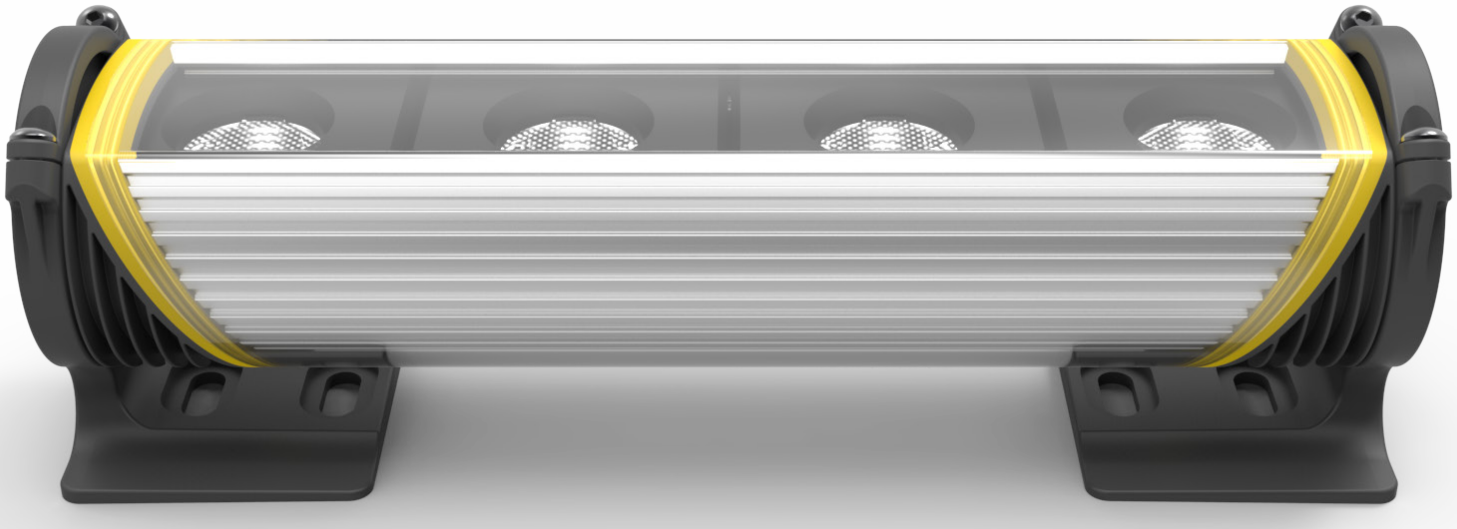
www.d-led.co.uk
office@d-led.co.uk