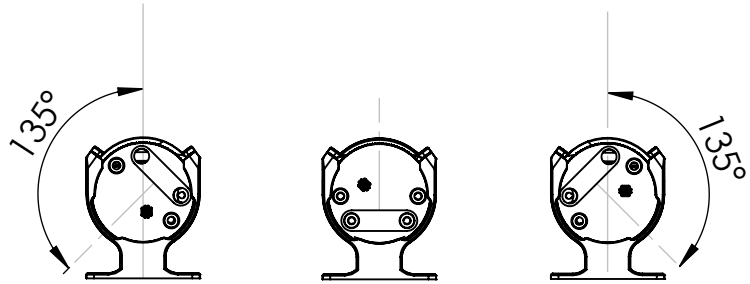

DIRECTION OF LIGHT

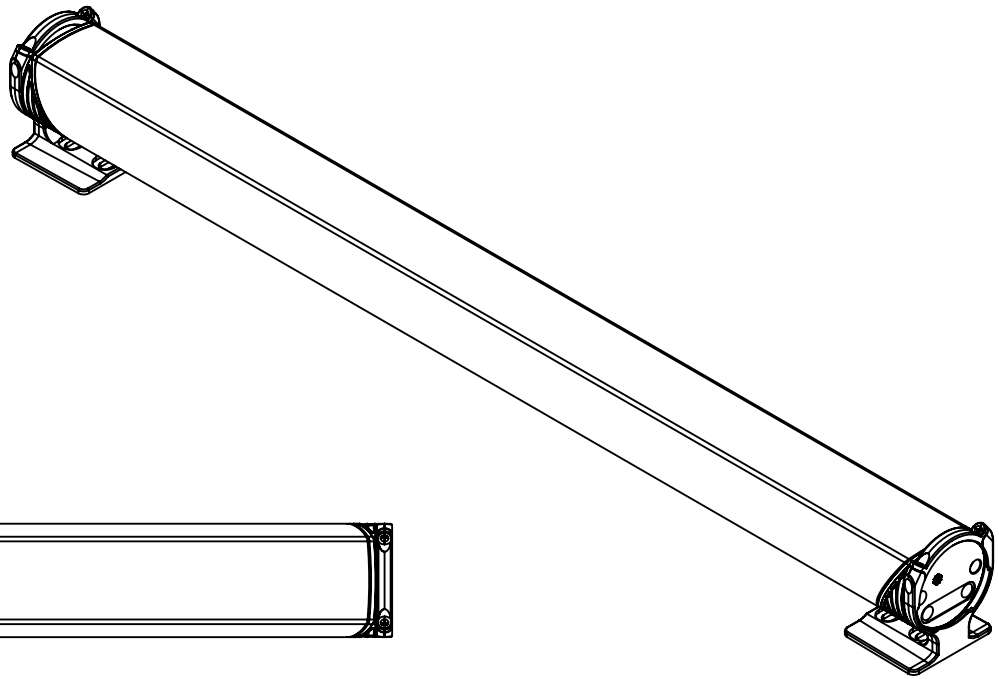

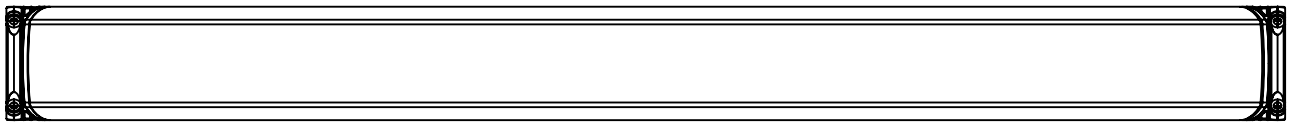

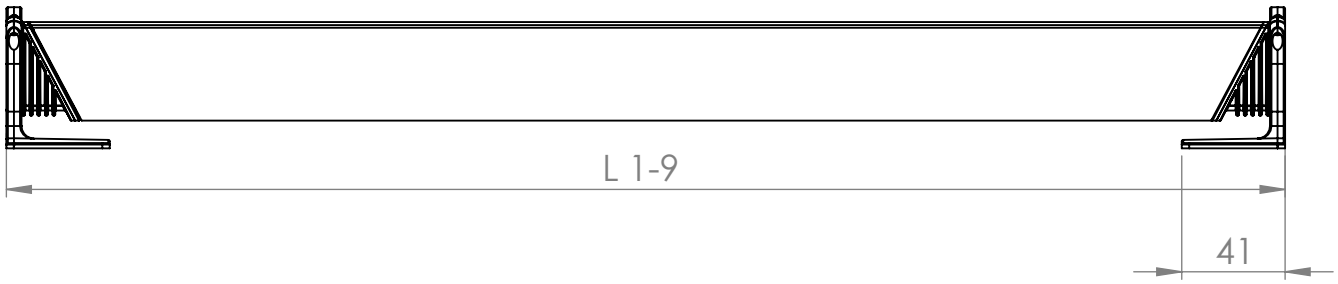

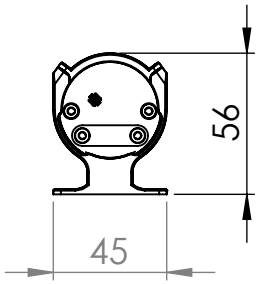

CONFIG	LENGTH	LED QTY	No of PCB
L1	176	4	1
L2	342	8	2
L3	507	12	3
L4	673	16	4
L5	838	20	5
L6	1004	24	6

CONFIG	LENGTH	LED QTY	No of PCB
L7	1170	28	7
L8	1335	32	8
L9	1501	36	9

dled
Illumination technologies

TITLE:

GENERAL VIEWS - RESIST

DO NOT SCALE DRAWING

GENERAL TOLERANCE IS ±0.1 UNLESS OTHERWISE SPECIFIED

UNLESS OTHERWISE SPECIFIED: DIMENSIONS ARE IN MILLIMETERS

A4

SCALE: 1:3 | DWG NO. 1 | SHEET 1 OF 1 | 31/08/2014