User instructions

ArcSource Outdoor 16 MC

The product generates coloured light by means of high power LEDs.The product was designed for exterior use and it is ideal for locations where signaling,directional or effect lighting is required.

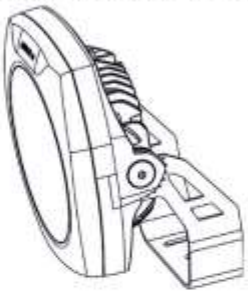

1.Attention

Consider the respective national norms during installation of the unit!
Do not install the unit near an open flame.
Avoid using the unit in locations subject to possible impacts.
Do not attempt to dismantle or modify the unit.
Do not install the module in badly ventilated location
Avoid looking directly into the LED light beam at close range.

2.Installation

The ArcSource Outdoor unit can be connected to the ArcPower 36K2/72K2, ArcPower 384Rack Mount or ArcPower 24 Outdoor /48 Outdoor. See their user manuals for full details of mains power requirements and DMX operation.
Example of installation:

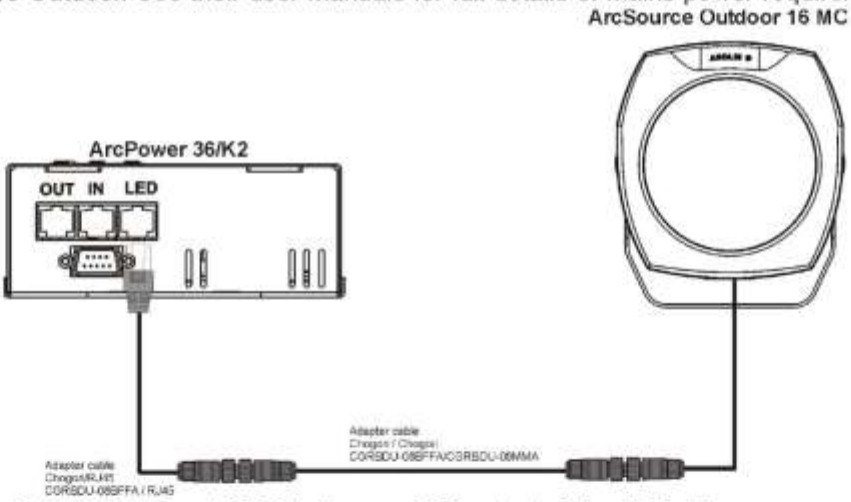

Number of connected ArcSource Outdoor 16 MC to the one LED output of the LED driver:
2 units for ArcPower 36/K2, ArcPower 72/K2, ArcPower 24 Outdoor
3 units for ArPower 48 Outdoor, ArcPower 384 Rack Mount
Note: Use the T-connector Chogori 8-pin (optional accessories) for multiply units installation.

Connections:
1. ArcSource Outdoor 16 MC

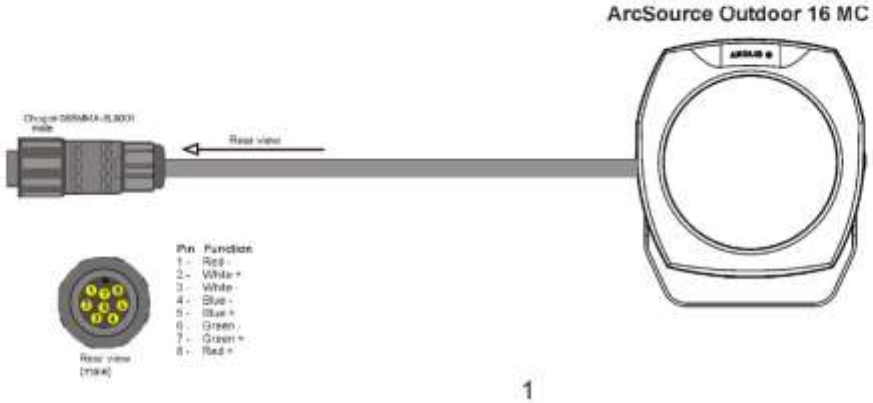

2. Adapter cable Chogori -RJ45 (it is not a standard part of delivery)

Pin	Function	Wire
1 -	Red -	Blue/white
2 -	White +	Blue
3 -	White -	Brown
4 -	Blue -	Brown/white
5 -	Blue +	Green/white
6 -	Green -	Green
7 -	Green +	Orange
8 -	Red +	Orange/white

Pin	Function	Wire
1 -	Red +	Orange/white
2 -	Green +	Orange
3 -	Blue +	Green/white
4 -	White +	Blue
5 -	Red -	Blue/white
6 -	Green -	Green
7 -	Blue -	Brown/white
8 -	White -	Brown

3. Adapter cable Chogori -Chogori (it is not a standard part of delivery)

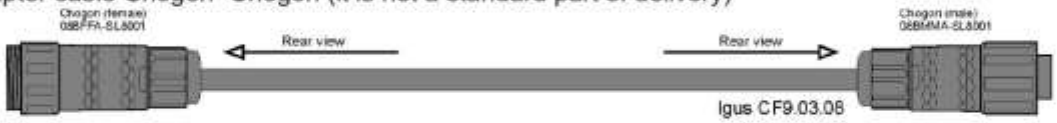

Pin	Function	Wire
1 -	Red -	Grey
2 -	White +	Pink
3 -	White -	Blue
4 -	Blue -	Red
5 -	Blue +	White
6 -	Green -	Brown
7 -	Green +	Yellow
8 -	Red +	Green

Pin	Function	Wire
1 -	Red -	Grey
2 -	White +	Pink
3 -	White -	Blue
4 -	Blue -	Red
5 -	Blue +	White
6 -	Green -	Brown
7 -	Green +	Yellow
8 -	Red +	Green

The ArcSource Outdoor unit can be arranged in any position orientation. LED module body is mounted on a steel "U" bracket for " tilt" adjustment, after adjusting desired inclination, secure the LED module bode by means of the Allen key 6. For fastening the unit on the wall (truss etc) serves 3 apertures in the U-bracket .

Top hat (half top hat) installation

Top hat

Half top hat

1. Unscrew the four socket head screws 6x10 (1) in the ArcSource Outdoor 16 MC housing and slide the top hat (2) onto ArcSource outdoor 16 MC.
2. Screw the holder (3) to the top hat (2) by means of the two screws (4) with tooth washers
3. Secure the top hat on the fixture with four socket head screws 6x10 (1) .

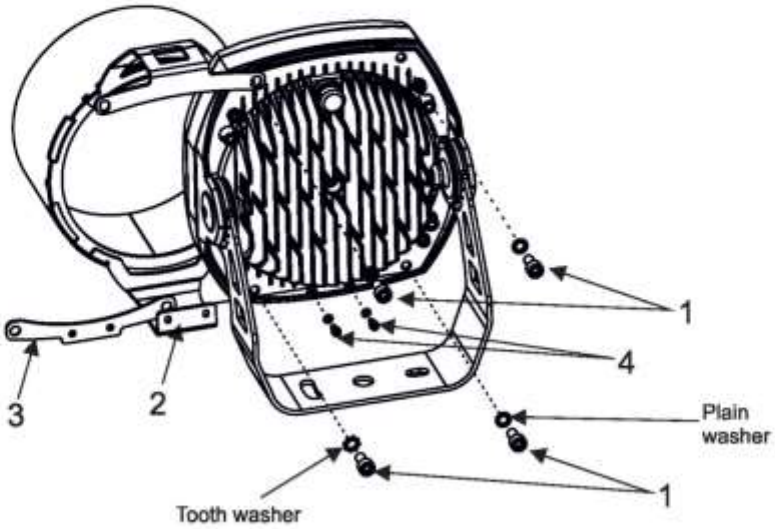

3.Technical specifications

Max input current per colour:	700 mA
Maximum power consumption:	36 Watts
Compatible power supplies :	ArcPower 36K2, ArcPower 72K2, ArcPower 384RackMount ArcPower 24 Outdoor, ArcPower 48 Outdoor, ArcZoneDRS
Max. surface temperature:	70°C@+45°C
Operating ambient temp.range:	-20°C/+45°C
Cooling system:	convection
LED device:	4 x high power RGBW multichip LED
Number of RGBW multichips:	4
Beam angle:	7°, 24°, 34°, 42°x7°, 7°x42°
Typical Lumen maintenance:	70%@ 60,000 hours
LED life expectancy:	minimum 60,000 hours
Protection factor:	IP 67
Construction:	
Body+ "U" bracket	High-pressure die cast aluminium
transparent cover	tempered glass
Weight:	2.8 kg
Connection plug:	Chogori 08BMMA-SL8001 (male)
Connection cable:	LiYY 8xAWG22 UL Style 2517/CSA O.D. 6,70mm; L=0.5m

Dimensions (mm)

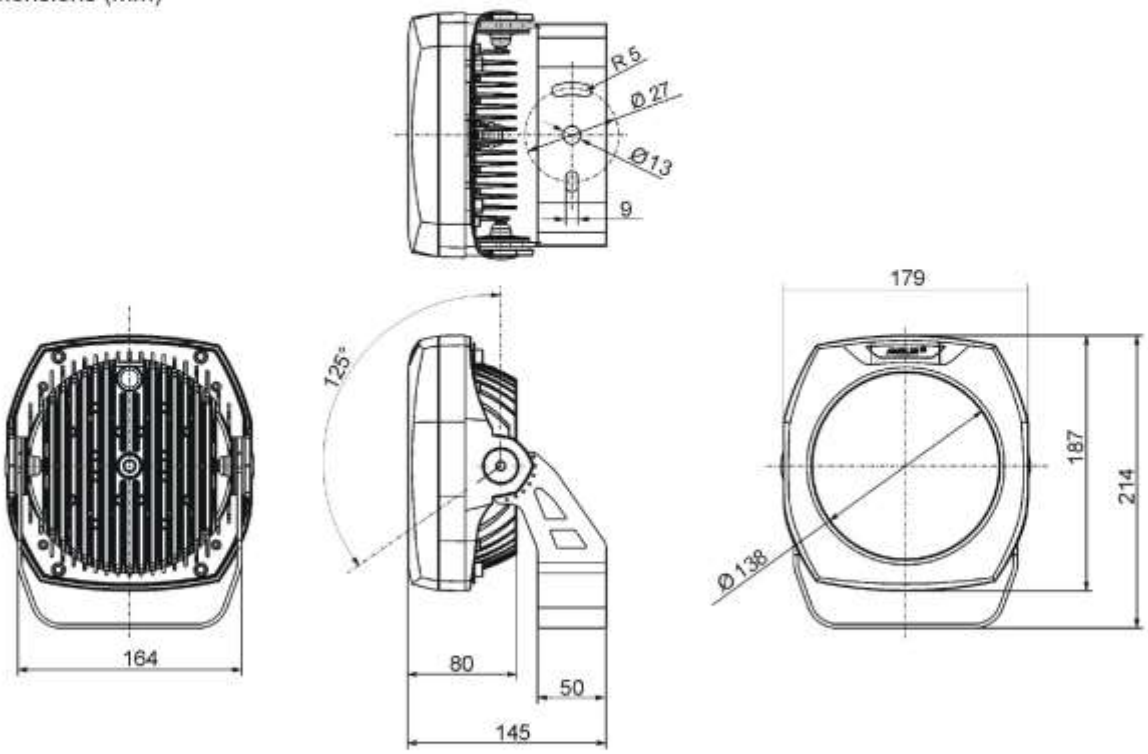

Top hat

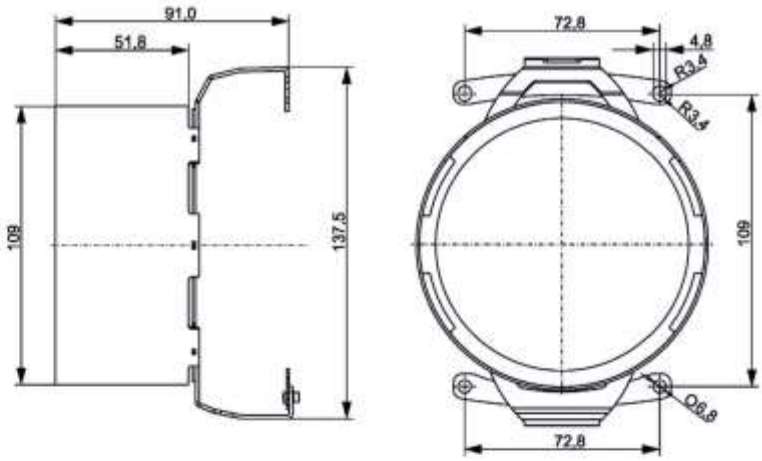

Half top hat

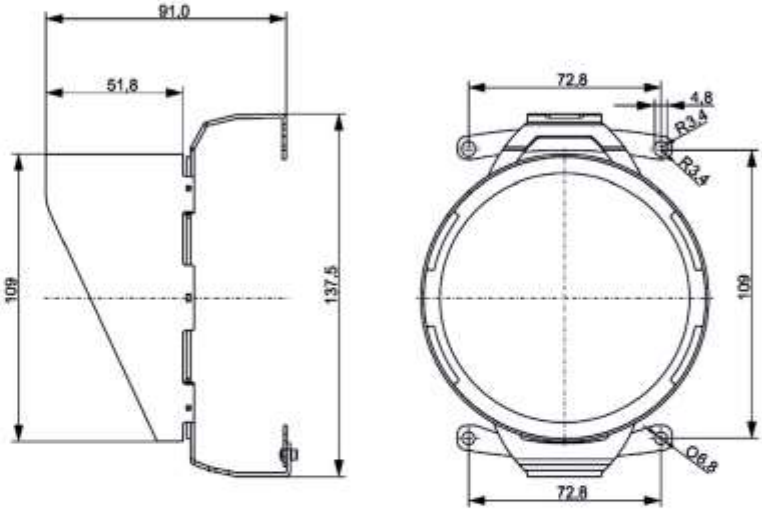

Floor stand

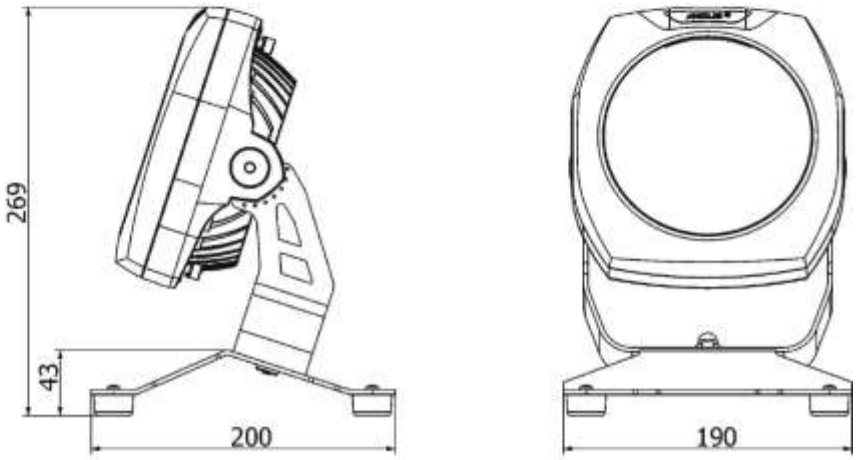

4. Accessories

1x Connector Chogori CGRBDU-08BFFA (female), IP68

5. Optional Accessories

(P/N 13051960) Adapter cable CGRBDU-08BFFA/ CGRBDU-08BMMA, L=3m, IP68
(P/N 13051966) Adapter cable CGRBDU-08BFFA/RJ45, L=0.25m
(P/N 13051938) T-connector Chogori 8-pin, IP67
(P/N 10980290)Top Hat ArcSource Outdoor 16 MC
(P/N 10980291) Half Top Hat ArcSource Outdoor 16 MC
(P/N 1098 0279) Floor stand for ArcSource Outdoor 16 MC
(P/N 10980327) Pole Clamp for ASO 16/24/48MC, 63-80mm
(P/N 10980328) Pole Clamp for ASO 16/24/48MC, 80-105mm
(P/N 10980325) Pole Clamp for ASO 16/24MC, 63-80mm
(P/N 10980326) Pole Clamp for ASO 16/24MC, 80-105mm
(P/N 10980331) Tenon Adaptor for ASO 16/24/48MC 64-80mm
(P/N 10980332) Tenon Adaptor for ASO 16/24/48MC 80-106mm
(P/N 10980329) Tenon Adaptor for ASO 16/24MC 64-80mm
(P/N 10980330) Tenon Adaptor for ASO 16/24MC 80-106mm
(P/N 10980334) Land Spike for ASO 16/24/48MC