User instructions

ArcSource Outdoor 24 MC

The product generates colored light by means of high power LEDs.The product was designed for exterior use and it is ideal for locations where signaling,directional or effect lighting is required.

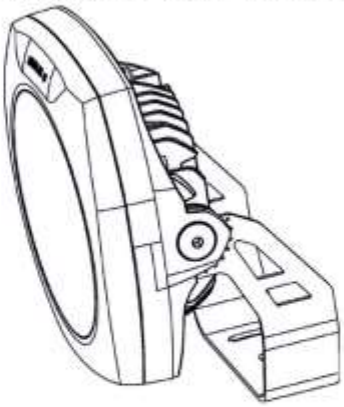

1.Attention

Consider the respective national norms during the installation!
Do not install the unit near naked flames.
Avoid using the unit in locations subject to possible impacts.
Do not attempt to dismantle or modify the unit.
Do not install the module in badly ventilated location
Avoid looking directly into the LED light beam at close range.

2.Installation

The ArcSource Outdoor unit can be connected to the ArcPower 36K2, ArcPower 72K2 or ArcPower 384Rack Mount. See their user manuals for full details of mains power requirements and DMX operation.

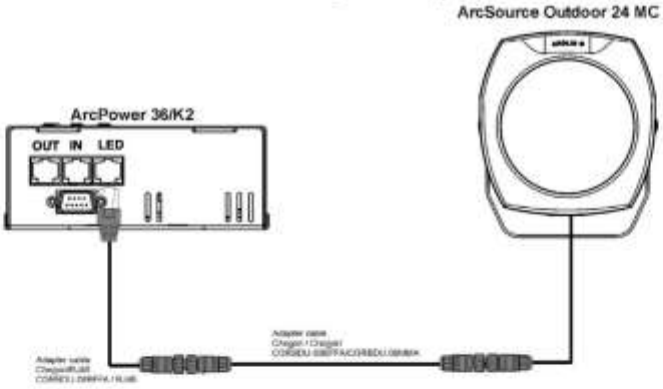

Only one ArcSouce Outdoor unit can be connected to the LED output of the driver.

Connections:
1. ArcSource Outdoor 24 MC

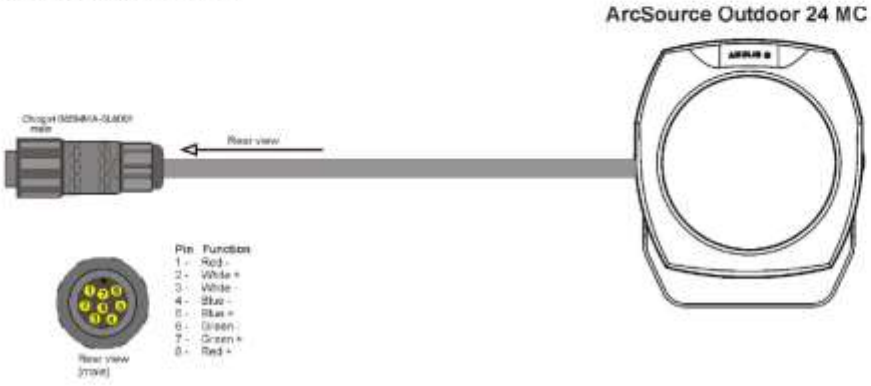

2. Adapter cable Chogori -RJ45 (it is not a standard part of delivery)

Pin	Function	Wire
1 -	Red -	Blue/white
2 -	White +	Blue
3 -	White -	Brown
4 -	Blue -	Brown/white
5 -	Blue +	Green/white
6 -	Green -	Green
7 -	Green +	Orange
8 -	Red +	Orange/white

Pin	Function	Wire
1 -	Red +	Orange/white
2 -	Green +	Orange
3 -	Blue +	Green/white
4 -	White +	Blue
5 -	Red -	Blue/white
6 -	Green -	Green
7 -	Blue -	Brown/white
8 -	White -	Brown

3. Adapter cable Chogori -Chogori (it is not a standard part of delivery)

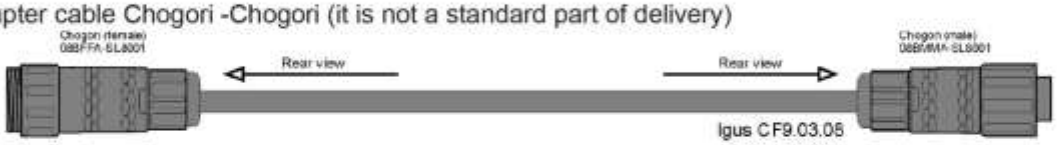

Pin	Function	Wire
1 -	Red -	Grey
2 -	White +	Pink
3 -	White -	Blue
4 -	Blue -	Red
5 -	Blue +	White
6 -	Green -	Brown
7 -	Green +	Yellow
8 -	Red +	Green

Pin	Function	Wire
1 -	Red -	Grey
2 -	White +	Pink
3 -	White -	Blue
4 -	Blue -	Red
5 -	Blue +	White
6 -	Green -	Brown
7 -	Green +	Yellow
8 -	Red +	Green

The ArcSource Outdoor unit can be arranged in any position orientation. LED module body is mounted on a steel "U" bracket for " tilt" adjustment, after adjusting desired inclination, secure the LED module bode by means of the Allen key 6. For fastening the unit on the wall (truss etc) serves 3 apertures in the U-bracket .

Top hat (half top hat) installation:

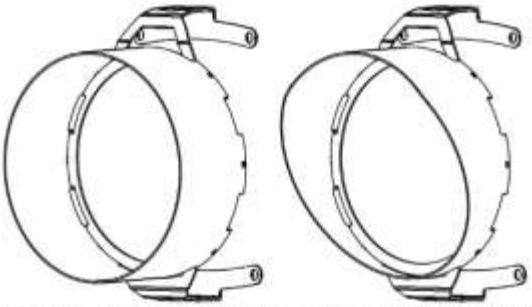

Unscrew the four socket head screws 6x10 (1) in ArcSource Outdoor 24 MC housing and slide the top hat (2) onto ArcSource outdoor 24 MC and secure it with four socket head screws 6x10 through holes (3) in the top head.

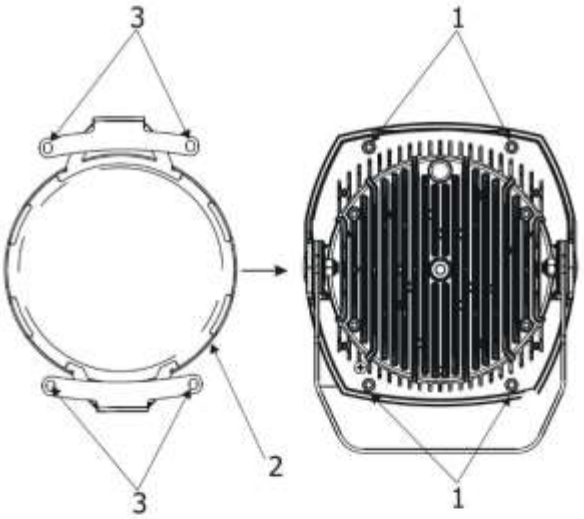

3.Technical specifications

Max input current (per colour):	700 mA
Maximum power consumption:	60 Watts
Comp. power supplies :	ArcPower 36K2, ArcPower 72K2, ArcPower 384RackMount ArcPower 24 Outdoor, ArcPower 48 Outdoor
Max. surface temperature:	75°C@+40°C
Operating ambient temp.range:	-20°C/+40°C
Cooling system:	convection
LED device:	Cree MC-E
Number of RGBW multichips:	6
Beam angle:	11°, 26°, 36°
Typical Lumen maintenance:	70%@ 60,000 hours
LED life expectancy:	minimum 60,000 hours
Ingress Protection:	IP 67
Construction:	
Body+ "U" bracket	High-pressure die cast aluminium
transparent cover	tempered glass
Weight:	4.3 kg
LED connection plug:	Chogori 08BMMA-SL8001 (male)
LED connection cable:	LiYY 8xAWG22 UL Style 2517/CSA O.D. 6,70mm; L=0.5m

Dimensions (mm)

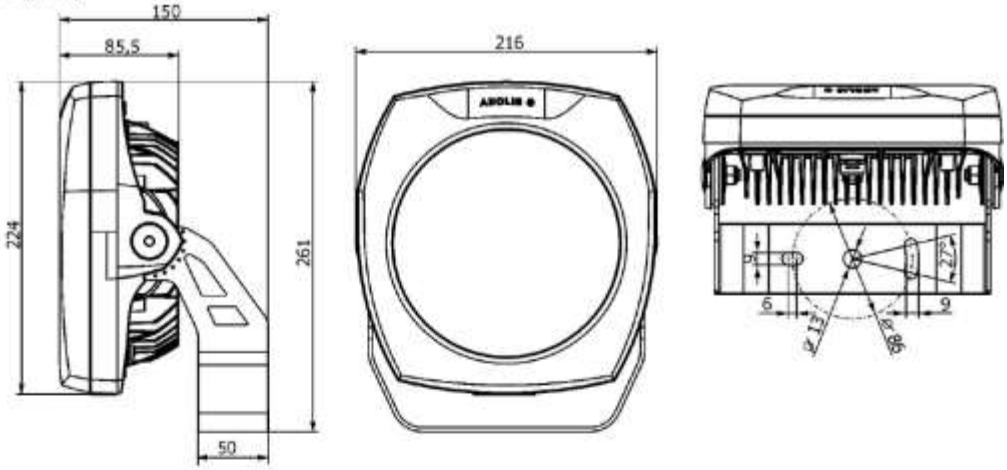

Top hat

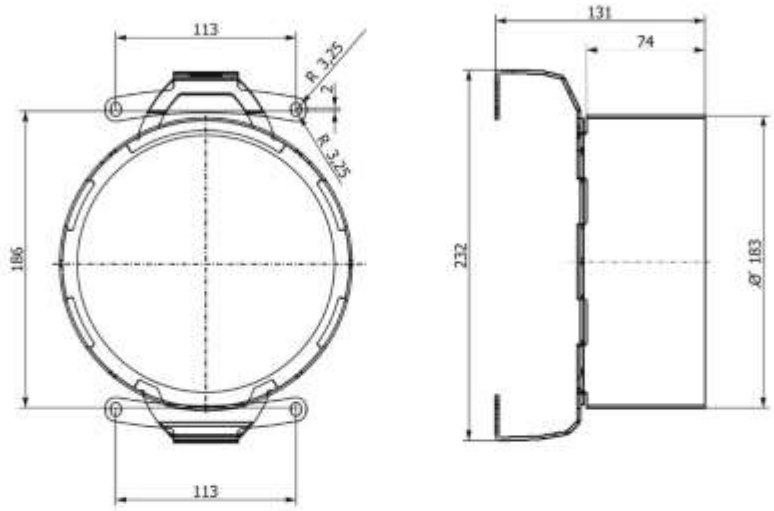

Half top hat

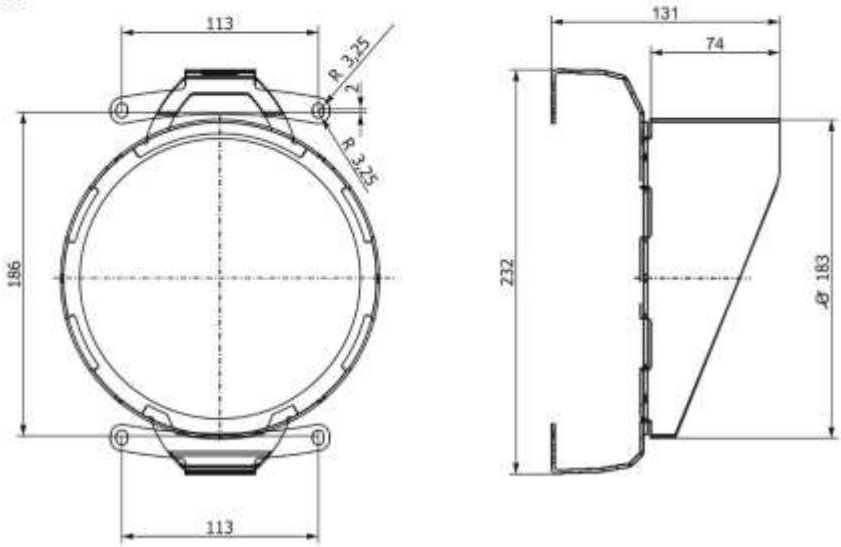

Floor stand

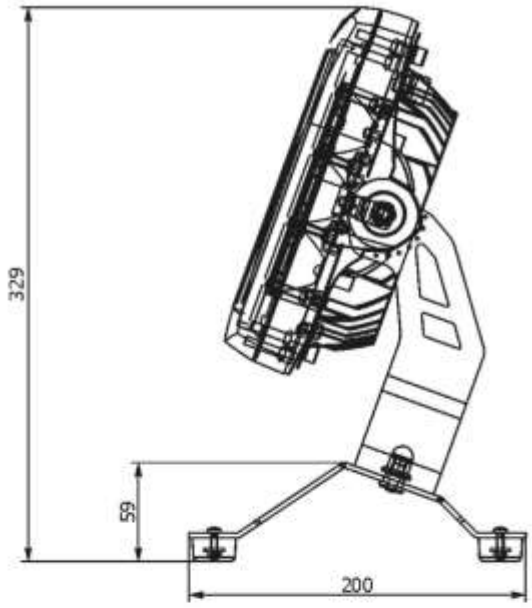

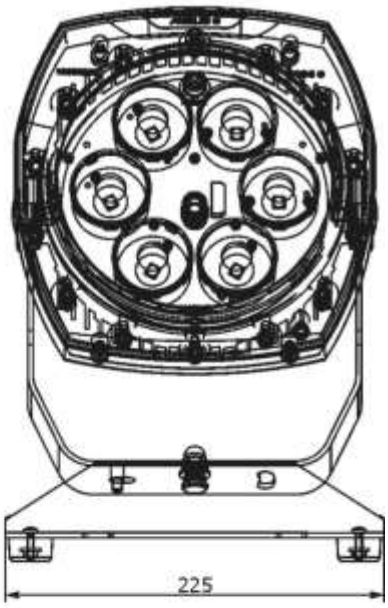

4. Accessories

1x Connector Chogori CGRBDU-08BFFA (female), IP68

5. Optional Accessories

(P/N 13051960) Adapter cable CGRBDU-08BFFA/ CGRBDU-08BMMA, L=3m, IP68
(P/N 13051966) Adapter cable CGRBDU-08BFFA/RJ45, L=0.25m
(P/N 13051938) T-connector Chogori 8-pin, IP67
(P/N 10980171) Top Hat ArcSource Outdoor 24 MC
(P/N 10980172) Half Top Hat ArcSource Outdoor 24 MC
(P/N 1098 0175) Floor stand for ArcSource Outdoor 24 MC
(P/N 10980327) Pole Clamp for ASO 16/24/48MC, 63-80mm
(P/N 10980328) Pole Clamp for ASO 16/24/48MC, 80-105mm
(P/N 10980325) Pole Clamp for ASO 16/24MC, 63-80mm
(P/N 10980326) Pole Clamp for ASO 16/24MC, 80-105mm
(P/N 10980331) Tenon Adaptor for ASO 16/24/48MC 64-80mm
(P/N 10980332) Tenon Adaptor for ASO 16/24/48MC 80-106mm
(P/N 10980329) Tenon Adaptor for ASO 16/24MC 64-80mm
(P/N 10980330) Tenon Adaptor for ASO 16/24MC 80-106mm
(P/N 10980334) Land Spike for ASO 16/24/48MC