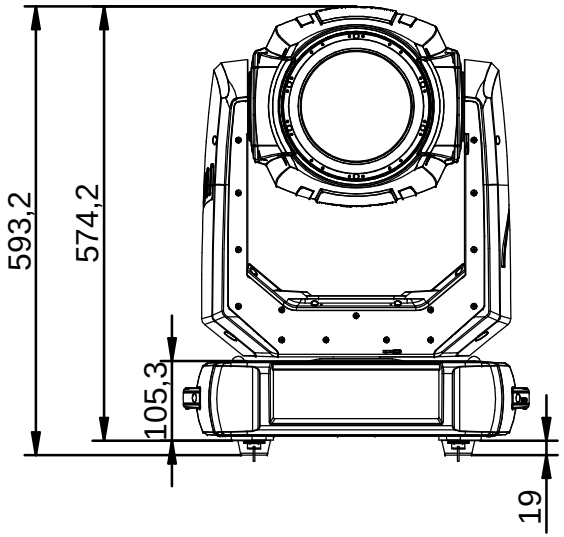

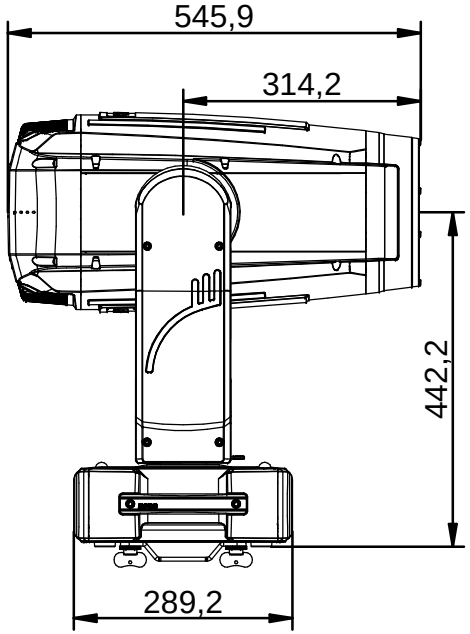

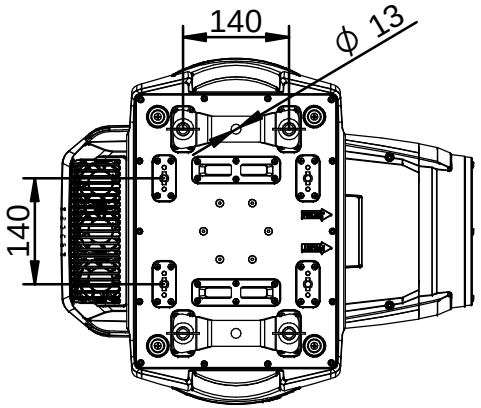

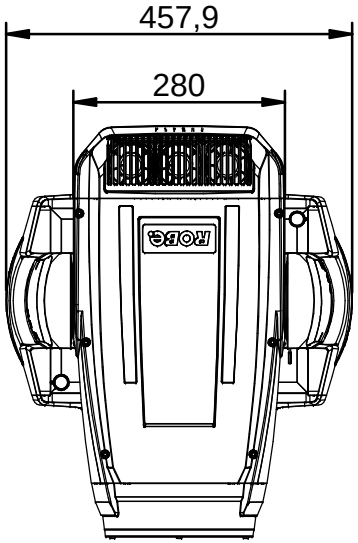

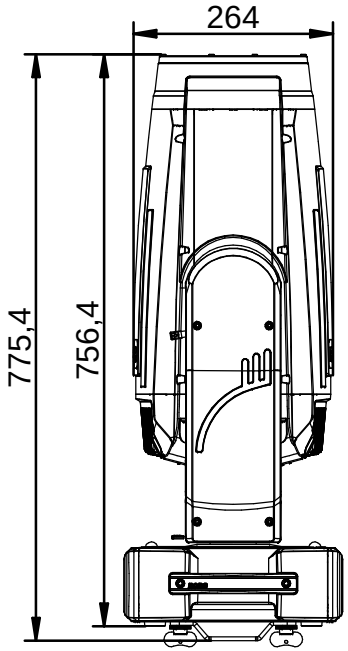

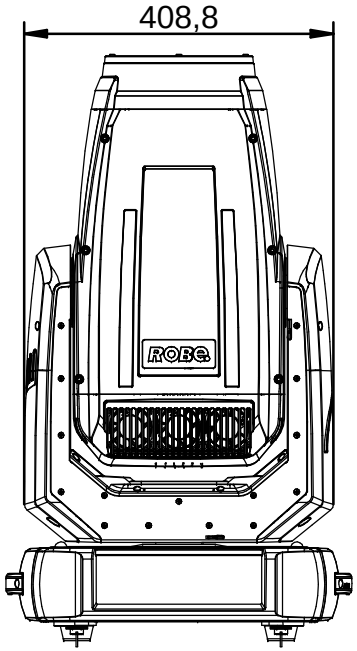

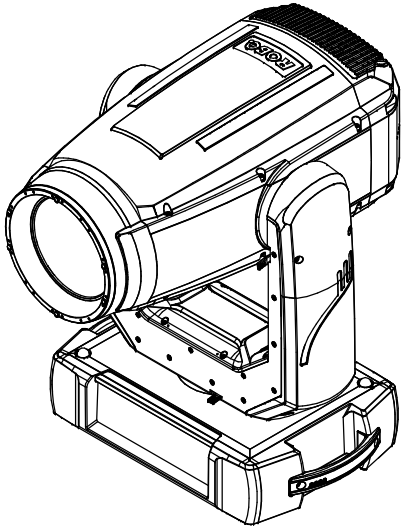

WEIGHT: 34,7 kg ± 0,2 kg

PAN RANGE: 540° TILT RANGE: 265°

PRODUCT: Robin iEsprite		
TITLE: Dimensions		
DOCUMENT: All dimensions in mm.		
VERSION: 1	DATE: 17. 03. 2023	SHEET: 1 OF 1