User manual

eco Stage

PAR LED
7X15W IP65

Please read carefully before use

Please Note: Specifications and improvements in the design of this unit and this manual are subject to change without any prior written notice.

Packaging:Thanks for your purchasing the AH056B. All the lights have been checked and are in excellent operating condition. Please check the shipping carton first,because there may be damage occurred during the shipment.Then check the lights carefully and be sure that the lights is intact and works normally.In the event damage has been found, spare parts are missing or the lights works abnormally,please contact us for further instructions. And please don't return the lights to the dealer before contacting us.

Introduction:The AH056B has three operating modes:DMX mode, Auto mode and Master/Slave mode.And the lights has five DMX modes,including channel 3,channel 4 , channel 6, channel 8 and channel 11.There are twenty-one built-in Auto programs and you can see twenty-one kinds of shows when you open the Auto mode.Meanwhile, you can edit your desired Auto program in "EDIT"menu.In addition, you can connect several pieces of lights in DMX mode and set one in Auto mode, and the others in Master/Slave mode.And then all the lights in Master/Slave mode will run following the one in Auto mode.Using fog or special effect smoke,you can see better showing effect.

Warning!

1.Don't expose the lights to rain or moisture,for the sake of preventing the risk of electrical shock or fire.

2.Don't look directly at the opening lights all the time,or it may damage your eyes.

Product Overview

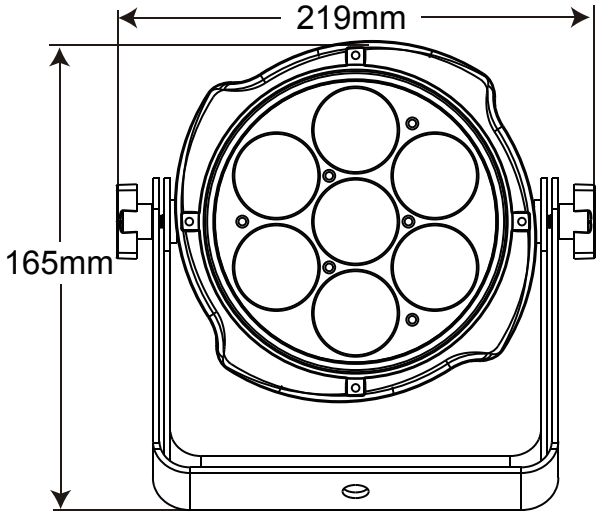

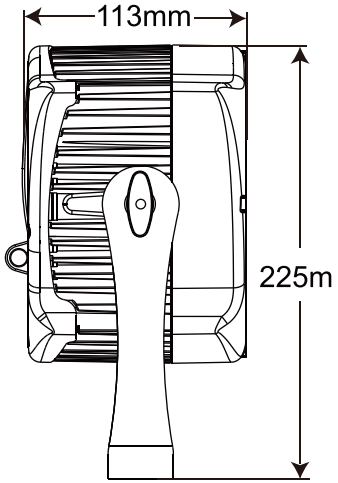

Features

OPTICS
- Light Source: 7*15W, 4 in 1 RGBW LEDs
- Lens: 15°

ELECTRICAL
- Power consumption: 84W
- Power linkable: 20pcs @230V;10pcs @110V
- Voltage: 100V -240V, 50/60Hz

CONTROL
- DMX channels: 3, 4, 6, 8 & 11CH
- Run Mode: DMX 512 /Master Slave/Auto Run
- Built-in Effect: color mixing, variable color chasing, strobing and fading.
- Maximum 66 ID setng for easy separately control

SOFTWARE
- 10 internal programs and 10 customerize programs
- 4 different dimming curve
- 11 kinds of color temperature white
- Smart temperature control
- Working time record

PHYSICAL
- Material: Aluminum body
- TFT displayer with four buttons
- Key lock for buttons
- IP65
- Temperature: -30℃~45℃
- N.W: 3.4 KG
- G.W: 4.3 KG
- Dimensions: 219 x 113 x 225 mm

Displayer introduction

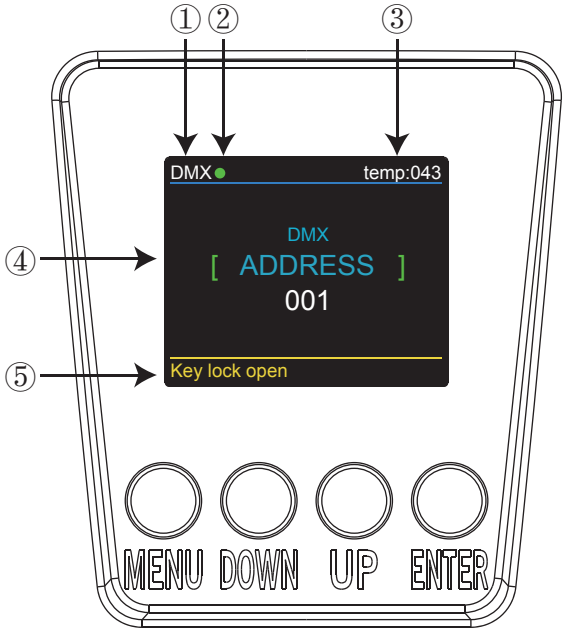

1. DMX means the light is in the DMX mode.Similarly,SLAVE means the light is in the SLAVE mode.
2. The color of the point shows the condition of signal transmission. Green represents the good condition, while red represents the signal is interrupted.
3. The item shows the working temperature of the light.When the working temperature exceeds the max temperature,the color of the letters and number will change from white to yellow.
4. This item shows the menu you selected.
5. This item shows the condition of key lock. “Key lock open” means the key lock is open.And “Key lock off” means the key lock is close.

Mechanical Specification

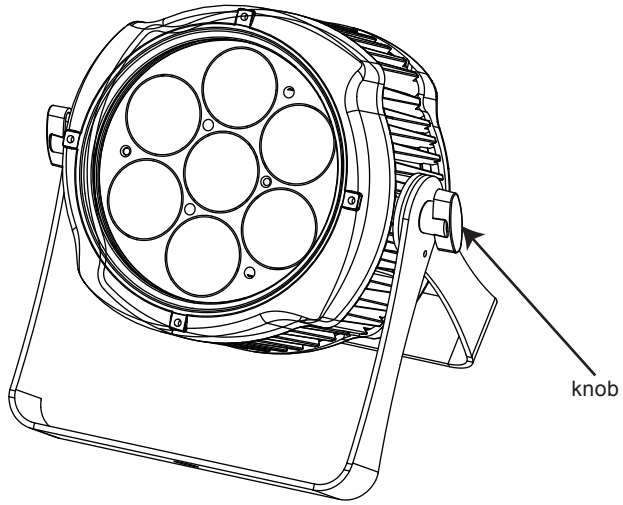

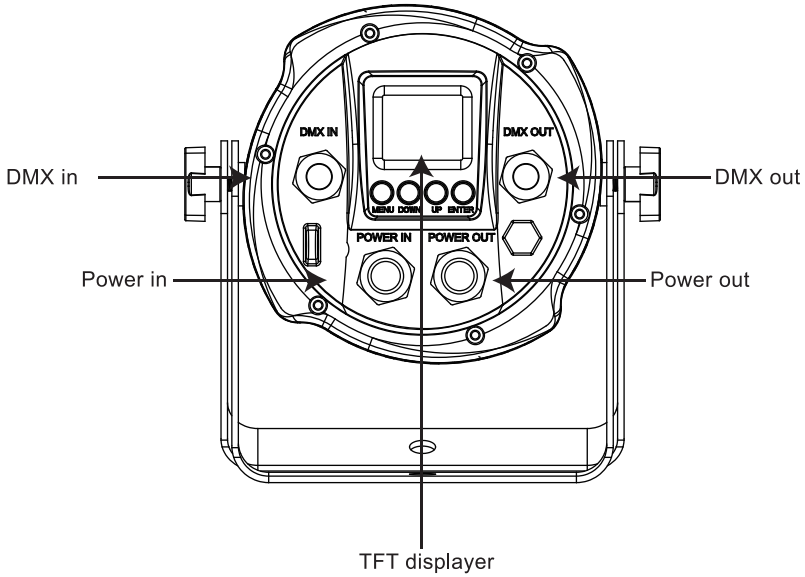

CABLE CONNECTORS

Cabling must have a male XLR connector on one end and a female XLR connector on the other end.

DMX connector configuration

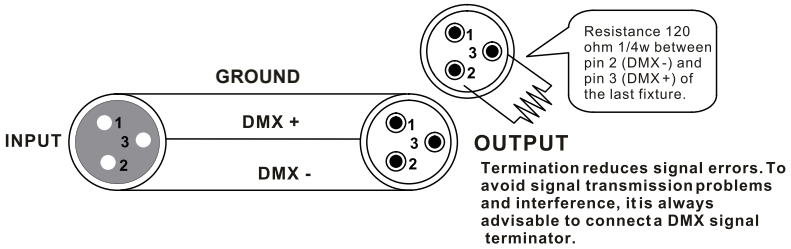

caution:Do not allow contact between the ground and the fixture's chassis ground. Grounding the ground can cause a ground loop, and your fixture may perform erratically. Test cables with an ohm meter to verify positive pole and to make sure the pins are not grounded or shorted to the shield or each other.

3-PIN TO 5-PIN CONVERSION CHART

Note! If you use a controller with a 5 pin DMX output connector, you need to use a 5 pin to 3 pin adapter. The chart below details a proper cable conversion:

3-PIN TO 5-PIN CONVERSION CHART

Conductor	3 Pin Female (output)	5 Pin Male (Input)
Ground/Shield	Pin 1	Pin 1
Data (-) signal	Pin 2	Pin 2
Data (+) signal	Pin 3	Pin 3
Do not use		Do not use
Do not use		Do not use

Programme Menu

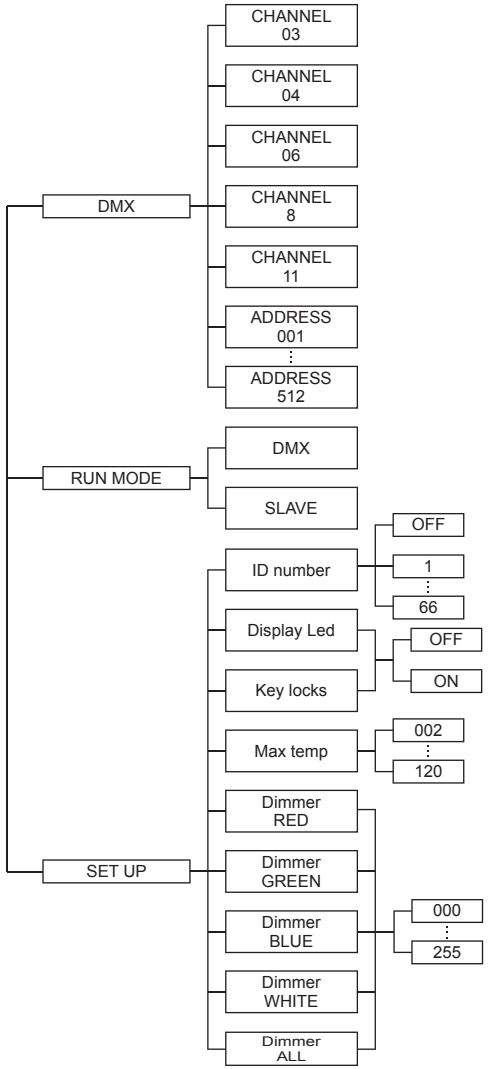

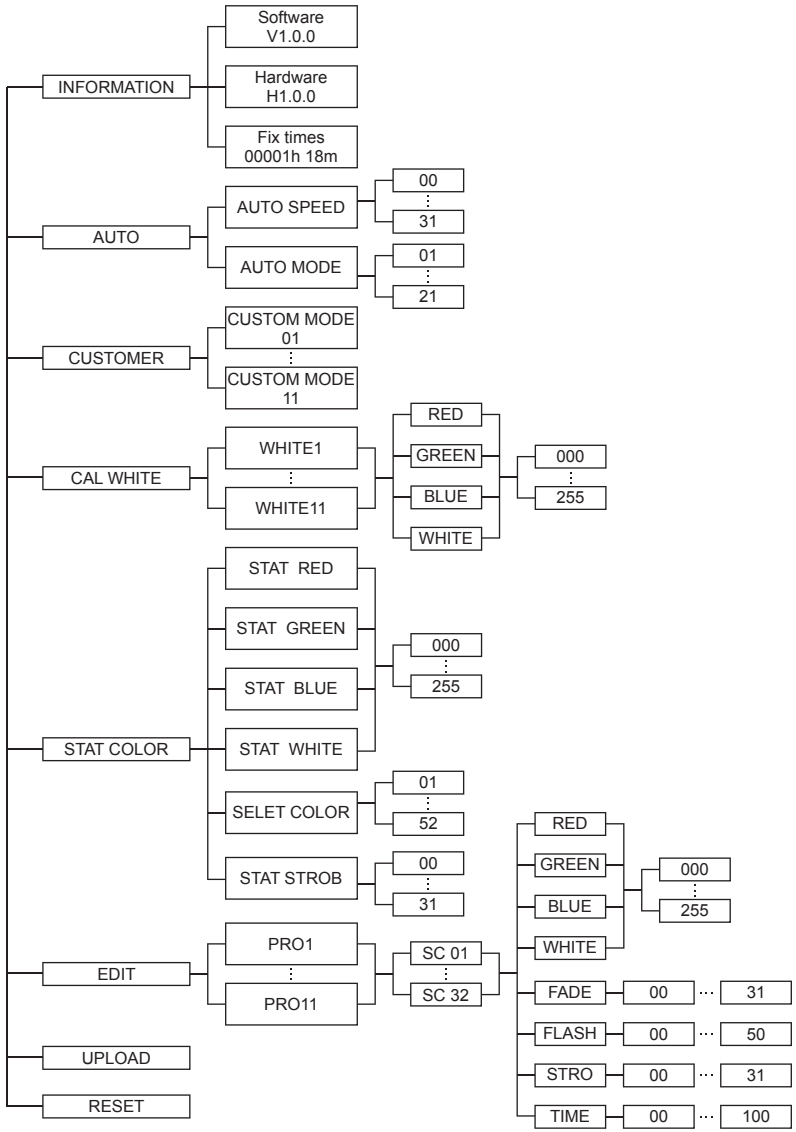

UPLOAD

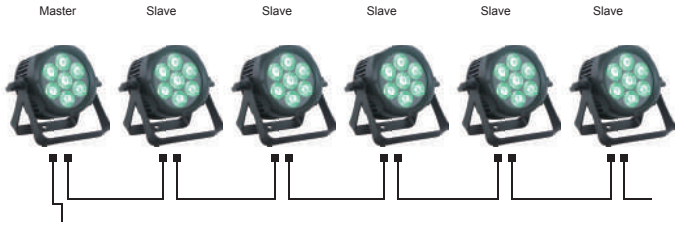

First,set one light, which involves the program you have edited in EDIT menu and want to upload, in Master mode,and others in Slave mode.

Then,connect all the lights with DMX cables.Finally,select the UPLOAD menu of the Master light and press ENTER.All the programs edited in the Master light will be uploaded to the Slave lights.

Channel 11 (Id address set)

0--9	all Ids	170--179	Id17	223	Id34	240	Id51
10--19	Id1	180--189	Id18	224	Id35	241	Id52
20--29	Id2	190--199	Id19	225	Id36	242	Id53
30--39	Id3	200--209	Id20	226	Id37	243	Id54
40--49	Id4	210	Id21	227	Id38	244	Id55
50--59	Id5	211	Id22	228	Id39	245	Id56
60--69	Id6	212	Id23	229	Id40	246	Id57
70--79	Id7	213	Id24	230	Id41	247	Id58
80--89	Id8	214	Id25	231	Id42	248	Id59
90--99	Id9	215	Id26	232	Id43	249	Id60
100--109	Id10	216	Id27	233	Id44	250	Id61
110--119	Id11	217	Id28	234	Id45	251	Id62
120--129	Id12	218	Id29	235	Id46	252	Id63
130--139	Id13	219	Id30	236	Id47	253	Id64
140--149	Id14	220	Id31	237	Id48	254	Id65
150--159	Id15	221	Id32	238	Id49	255	Id66
160--169	Id16	222	Id33	239	Id50		

DMX-512 addressing with ID address

1. Follow instructions 1 for DMX 512 addressing.

2. Activate ID addressing in each fixture by setting panel function “ID ON/OFF” to ON. “Settings” to “ID ON/OFF” to “ON” For every DMX 512 starting address the user can set 66 separate ID addresses. Set ID addresses in each fixture by setting panel function “ ID address” to incremental values.(I.e. 1, 12, 24, 36 etc...) “Settings” to “address” to “01~66”.

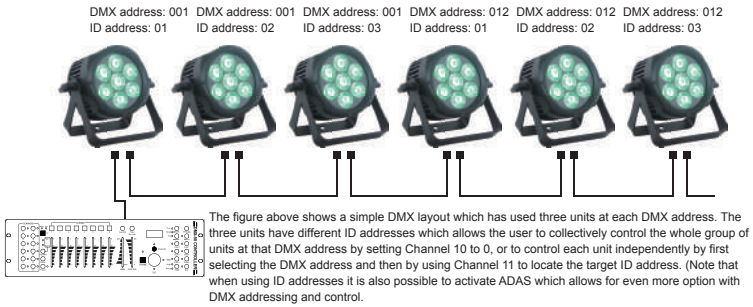

The figure above shows a simple DMX layout which has used three units at each DMX address. The three units have different ID addresses which allows the user to collectively control the whole group of units at that DMX address by setting Channel 10 to 0, or to control each unit independently by first selecting the DMX address and then by using Channel 11 to locate the target ID address. (Note that when using ID addresses it is also possible to activate ADAS which allows for even more option with DMX addressing and control.

DMX-In this menu,you can connect several pieces of lights with DMX cable and control them with control console.
1. Press “ENTER” button and then UP or DOWN button until “DMX ” is showed.
2. Press “ENTER” button, and “CHANNEL” or “ADDRESS” will be showed.Then press ENTER.
1) “Channel [xx]” will be showed, “X” represents the showed DMX channel mode. You can press the UP or DOWN button to select your desired Channel mode.
2) “xxx” will be showed, “x” represents the showed address. You can press the UP or DOWN button to select your desired address.

RUN MODE-In this menu, you can select DMX mode or SLAVE mode.In SLAVE mode,you can select one light as the MASTER light and other lights in SLAVE mode will run following the MASTER light.
1. Press “ENTER” button and then UP or DOWN button until “RUN MODE” is showed.
2.Press “ENTER” button, and“DMX” or “SLAVE” will be showed, then press ENTER to select your desired mode.

SET UP-In this menu, you can adjust the value of the function.
1. Press “ENTER” button and then UP or DOWN button until “SET UP” is showed.
2. Press “ENTER” button, and there will be nine options. Then,press ENTER to select the option and press UP or DOWN button to select the value you desire as below.
1) ID number - You can select an ID Number in this menu.Then, you can adjust the value of channel 11 to the corresponding scope and control the light individually with control console.
2) Display Led - In this item,you can select “ON” or “OFF”.If you select ON,the displayer will be on all the time.And if you select OFF,the displayer will extinguish about ten seconds later.
3) Key locks - You can select whether the password is on or off in this menu , and the password is [DOWN] + [UP] + [DOWN] + [UP] .If you select “on”,then you have to input the password before pressing the buttons.Otherwise,the light won’t respond to your order.
4) Max temp - You can set the your desired Max working temperature about the light in this menu.When the working temperature of the light exceeds the Max temperature, the color of letter “Temp xx” showed in the menu will change from white to yellow.Meanwhile, the light will adjust the working temperature automatically.
5) Dimmer RED - You can adjust the red brightness in this menu.
6) Dimmer GREEN - You can adjust the green brightness in this menu.
7) Dimmer BLUE - You can adjust the blue brightness in this menu.
8) Dimmer WHITE - You can adjust the white brightness in this menu.
9) Dimmer ALL - You can adjust the brightness of each color in this menu.

INFORMATION-In this menu, you can learn about the information of software, hardware and the working time of the light.
1. Press “ENTER” button and then UP or DOWN button until “INFORMATION” is showed.
2. Press “ENTER” button, and“Software” “Hardware” or “Fix times” will be showed. Then press ENTER, and you can see three items as below:
1) Software - This item displays the Software information.
2) Hardware - This item displays the Hardware information.
3) Fix times - This item displays the working hours about the light.

AUTO-In this menu, you can select your desire AUTO mode and adjust the running speed.
1. Press “ENTER” button and then UP or DOWN button until “AUTO” is showed.
2. Press “ENTER” button, and “SPEED” or “AUTO MODE” will be showed. Then press ENTER,and you can see two items as below:
1) SPEED - You can select your desired speed in this menu.
2) AUTO MODE - You can select your desired auto mode in this menu.

CUSTOMER-In this menu,you can select the AUTO program edited in the “EDIT” menu.
1. Press “ENTER” button and then UP or DOWN button until “CUSTOMER” is showed.
2. Press “ENTER” button, and there are 11 pre-programmed mode editted in the “EDIT”menu.

CAL WHITE-In this menu, you can adjust the value of 11 different white color.
1. Press “ENTER” button and then UP or DOWN button until “CAL WHITE” is showed.
2. Press “ENTER” button, and there are 11 pre-programmed White colors that can be edited by adjusting the value of “Red”, “Green”, “Blue” and “White”

STAT COLOR-In this menu, you can adjust the value of static color and strobe speed as you like.
1. Press “ENTER” button and then UP or DOWN button until “STAT COLOR” is showed.
2. Press “ENTER” button, and there are six options. Then press ENTER to select the option and press UP or DOWN button to select the value you desire as below:
1) STAT RED - You can adjust the red brightness in this menu.
2) STAT GREEN - You can adjust the green brightness in this menu.
3) STAT BLUE - You can adjust the blue brightness in this menu.
4) STAT WHITE - You can adjust the white brightness in this menu.
5) SELET COLOR -You can select 52 static color in this menu.
6) STAT STROB - You can adjust the strobe speed in this menu.

EDIT-In this menu, you can edit your desired AUTO program.
1. Press “ENTER” button and then UP or DOWN button until “EDIT” is showed.
2. Press “ENTER” button, and open the “EDIT” mode to edit the custom programs from“PR.01” to “PR.11”.And there are 32 scenes that can be edited in each custom program.
3. You can edit a scene by adjusting the value of “RED (0~255)”, “GREEN (0~255)”, “BLUE (0~255)”, “WHITE (0~255)”, “FADE (0~31)”, “FLASH(0~50)”, “STROBE (0~31)” & “TIME (0~100)” as you like. Then the data will be saved, when you press the ENTER button for 5 seconds.

UPLOAD-In this menu,you can connect several pieces of lights with MAX cables and set one light as the MASTER and others in SLAVE mode.Then upload the custom program in the MASTER light to the lights in SLAVE mode.
1. Press “ENTER” button and then UP or DOWN button until “UPLOAD” is showed.
2. Press “ENTER” button to upload the custom programs from the MASTER light to the SLAVE ones.

RESET-In this menu, you can reset all the value of the system.
1. Press “ENTER” button and then UP or DOWN button until “RESET” is showed.
2. Press the ENTER button to reset all the value of the system.

7	0 - 255	Speed when channel 6 is enable
	0 - 255	strobe（0Hz - 20Hz）
		0 - 8 no function
		9 - 255 strobe from slow to fast
8	0 - 8	Default
	9 - 10	program 1
	11 - 20	program 2
	21 - 30	program 3
	31 - 40	program 4
	41 - 50	program 5
	51 - 60	program 6
	61 - 70	program 7
	71 - 80	program 8
	81 - 90	program 9
	91 - 100	Custom1
	101 - 110	Custom2
	111 - 120	Custom3
	121 - 130	Custom4
	131 - 140	Custom5
	141 - 150	Custom6
	151 - 160	Custom7
	161 - 170	Custom8
	171 - 180	Custom9
	181 - 190	Custom10
	200 - 255	Custom11
9	0 - 255	Speed when auto is enable
10	0 - 49	Off dimmer speed
	50 - 99	Dimmer speed 1
	100 - 149	Dimmer speed 2
	150 - 199	Dimmer speed 3
	200 - 255	Dimmer speed 4
11	0 - 255	Id address set

DMX 11 channel

channel	value	function
1	0 - 255	0 = Off 1 - 255 = Master dimmer
2	0 - 255	Adjust red LEDs Dimmer from low to high
3	0 - 255	Adjust green LEDs Dimmer from low to high
4	0 - 255	Adjust blue LEDs Dimmer from low to high
5	0 - 255	Adjust white LEDs Dimmer from low to high
6	0 - 10	No function
	11 - 20	R100%/Gup/B0%/W0%
	21 - 30	Rdown/G100%/B0%/W0%
	31 - 40	R0%/G100%/Bup/W0%
	41 - 50	Rup/Gdown/B100%W0%
	51 - 60	Rup/G0%/B100%/W0%
	61 - 70	R100%G0%Bdown/W0%
	71 - 80	R100%/G0%/B0%/Wup
	81 - 90	R100%/G0%/B0%Wdown
	91 - 100	R↑/G↓/B0%/W0%→R↓G↑/B0%/W0%
	101 - 110	R↑/G0%/B↓/W0%→R↓/G0%B↑/W0%
	111 - 120	R0%/G↑/B↓/W0%→R0%/G↓/B↑/W0%
	121 - 130	R↑/G↑/B↓/W0%→R↓/G↓/B↑/W0%
	131 - 140	R↑/G↓/B↓/W0%→R↓/G↑/B↑/W0%
	141 - 150	R↑/G↓/B↑/W0%→R↓/G↑/B↓/W0%
	151 - 160	R↑/G0%/B↓/W0%→R↓/G↑/B0%/W0%→R0%/G↓/B↑/W0%
	161 - 170	R↑/G100%/B↓/W0%→R100%/G↓/B↑/W0%→R↓/G↑/B100%/W0%
		R↓/G↑/B0%/W0%→R0%/G↓/B↑/W0%→R0%G0%/B↓/W↑
	171 - 180	R↑/G0%/B0%/W↓ R0%/G100%/B↓/W0%→R↑/G100%B0%/W0%
	181 - 190	R100%/G↓/B0%/W0%→R100%/G0%/B↑/W0%→ R↓/G0%/B100%/W0%→R0%/G↑/B100%/W0%
	191 - 200	RGBW
	201 - 205	White 1
	206 - 210	White 2
	211 - 215	White 3
	216 - 220	White 4
	221 - 225	White 5
	226 - 230	White 6
	231 - 235	White 7
	236 - 240	White 8
	241 - 245	White 9
	246 - 250	White 10
	251 - 255	White 11

DMX control mode

DMX 3 channel

channel	value	function
1	0 - 255	Hue
2	0 - 255	Saturation
3	0 - 255	Value(brightness)

DMX 4 channel

channel	value	function
1	0 - 255	Adjust red LEDs Dimmer from low to high
2	0 - 255	Adjust green LEDs Dimmer from low to high
3	0 - 255	Adjust blue LEDs Dimmer from low to high
4	0 - 255	Adjust white LEDs Dimmer from low to high

DMX 6 channel

channel	value	function
1	0 - 255	0 = Off 1 - 255 = Master dimmer
2	0 - 255	Adjust red LEDs Dimmer from low to high
3	0 - 255	Adjust green LEDs Dimmer from low to high
4	0 - 255	Adjust blue LEDs Dimmer from low to high
5	0 - 255	Adjust white LEDs Dimmer from low to high
6	0 - 49	default dimmer
	50 - 99	Dimmer mode 1
	100 - 149	Dimmer mode 2
	150 - 199	Dimmer mode 3
	200 - 255	Dimmer mode 4

DMX 8 channel

channel	value	function
1	0 - 255	0 = Off 1 - 255 = Master dimmer
2	0 - 255	Adjust red LEDs Dimmer from low to high
3	0 - 255	Adjust green LEDs Dimmer from low to high
4	0 - 255	Adjust blue LEDs Dimmer from low to high
5	0 - 255	Adjust white LEDs Dimmer from low to high
6	0 - 19	none
	20 - 23	red
	24 - 27	green
	28 - 31	blue
	32 - 35	yellow
	36 - 39	cyan
	40 - 43	magenta
	44 - 47	white
	48 - 51	orange
	52 - 55	pink
	56 - 59	violet
	60 - 63	aquamarine
	64 - 67	sky blue
	68 - 71	full white
	72 - 75	cool white
	76 - 79	warm white
	80 - 83	white 3200
	84 - 87	white 2500
	88 - 91	yellow 2
	92 - 95	straw
	96 - 99	orange 2
	100 - 103	light rose
	104 - 107	dark pink
	108 - 111	magenta 2
	112 - 115	blue 2
	116 - 119	med blue green
	120 - 123	dark blue
	124 - 127	bright pink
	128 - 131	medium blue
	132 - 135	golden amber
	136 - 139	deep golden amber
	140 - 143	pale lavender
	144 - 147	apricot
	148 - 151	dark lavender

	152 - 155	chocolate
	156 - 159	just blue
	160 - 163	surprise pink
	164 - 167	scarlet
	168 - 171	surprise peach
	172 - 175	fire
	176 - 179	english rose
	180 - 183	mauve
	184 - 187	bright blue
	188 - 191	alice blue
	192 - 195	rose indigo
	196 - 199	urban blue
	200 - 203	cool blue
	204 - 207	Light salmon
	208 - 211	mayan sun
	212 - 215	cherry rose
	216 - 219	flesh pink
	220 - 223	skelton exotic sangria
	224 - 255	amber
7	0 - 255	0~6 = Off 7 - 255 = Different colour auto 36
8	0 - 255	strobe（0Hz - 20Hz） 0~8 no function 9~255 strobe from slow to fast