User Manual

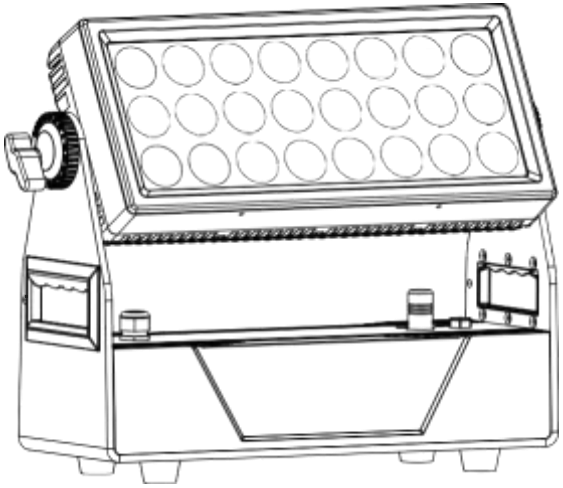

AT-WBAT-2410-4IN1-IP
BATTERY COLOR KID

Please read carefully before use

Please Note: Specifications and improvements in the design of this unit and this manual are subject to change without any prior written notice.

Author: Amy Designer: Vany Ver: V1.0

Safety Introduction Battery Color Kid

Before you operate this unit read the manual carefully. Always make sure to include the manual if you pass/rent/sell the unit to another user. Keep in mind that this manual cannot address all possible dangers and environments. Please use your own caution when operating. This product is for professional use only. It is not for household use.

•Do not operate the unit in areas of high temperature conditions. It will cause abnormal function or damage the product.
•Always use a suitable safety wire when mounting the light overhead.
•Connect the safety wire only to the intended safety mount.
• Always follow local safety requirements.

•Only qualified personnel may repair this product.
•Do not open the product housing.
•Do not apply power if the light is damaged.

•Do not directly look into the light.
•It can cause harm to your eyes.
•Do not look at the LEDs with a magnifying glass or any other optical instrument that may concentrate the light output.
•Please don't look at the light directly when the light's radiation temperature reach 40℃

•The exterior surfaces of the light can become hot, up to 55°C during normal operation.
•Ensure that accidental physical contact with the device is impossible.
• Install only in ventilated locations.
•Do not cover the light.

•Always charge with the flight case open.
• It is recommended to charge at a temperature between 15°C and 35°C

•Don't throw the unit into the garbage at the end of its lifetime.
• Make sure to dispose is according to your local ordinances and/or regulations, to avoid polluting the environment!
•The packaging is recyclable and can be disposed.

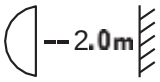

ta 45 °C

IR Controller

Power on/off button

DMX button,to control DMX address when press this button.It is channel mode when double click.

Master-slave mode button.

Automatic mode button

Speed adjustive button

Sound mode button

Up and down button,you can choose the program that you need or numerical.

Strobe button

0 1 2 3 4 5 W 6 7 R 8 G

You can use these number button to adjust numerical in any program mode.

7 R 8 G 9 B 5 W Color choosing button.

Product Overview

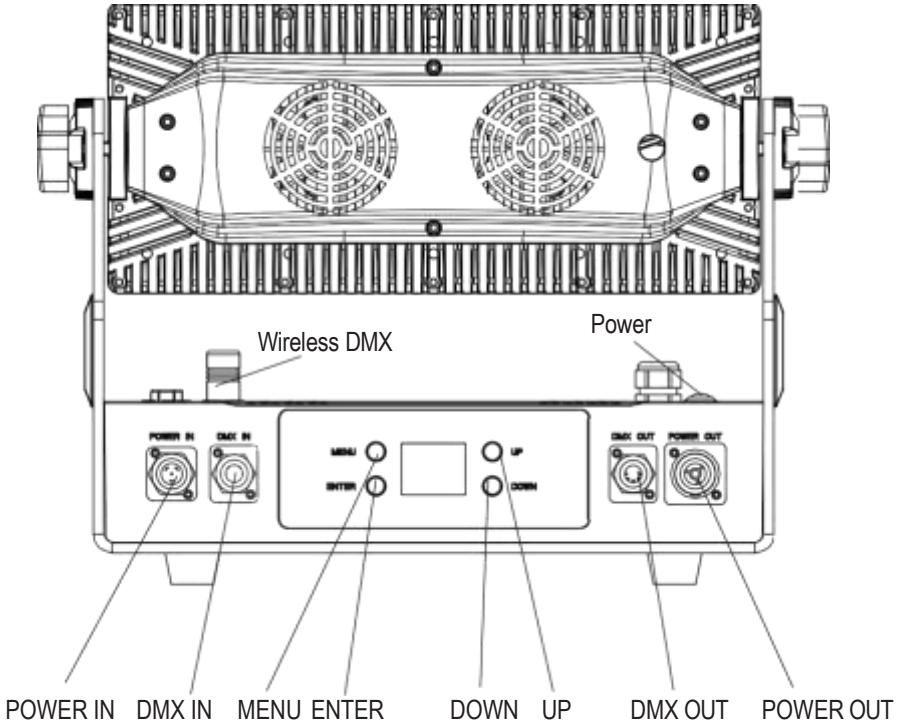

Mechanical Specification

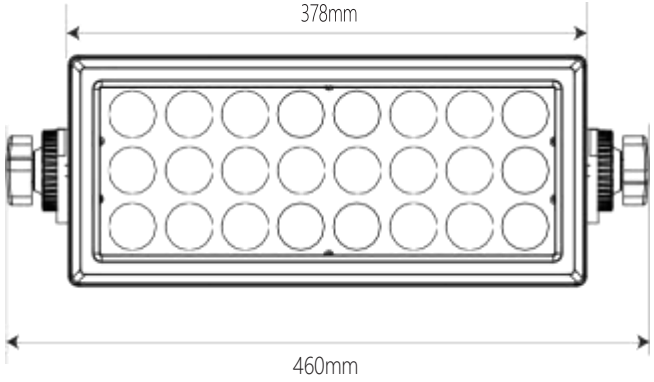

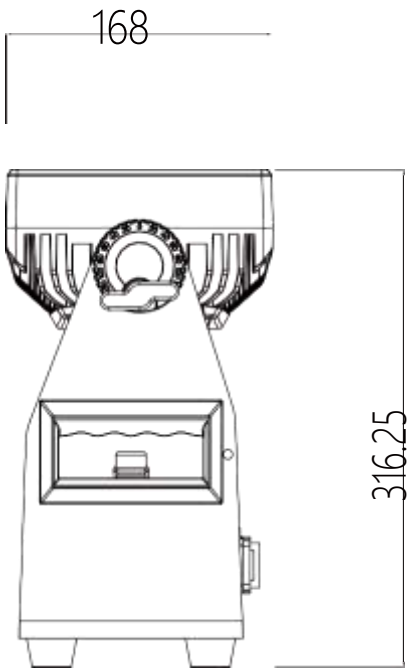

Accessory

① Magnetic frost filter (40° / 60 x 10°) x 1
② Barndoor x 1
③ 1/4 turn fast lock x 1
④ Power cable x 1
⑤ User manual x 1

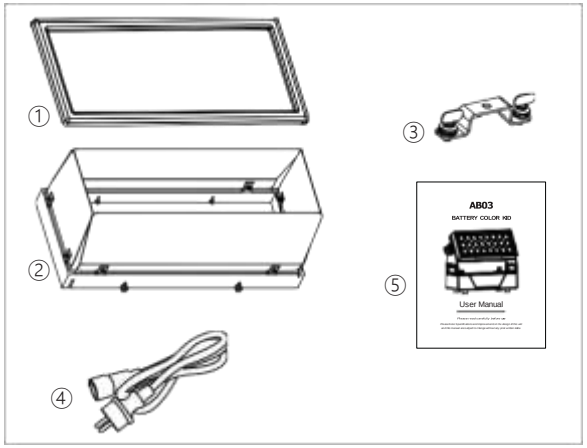

RDM---Remote Device Management

RDM is a wild version of the DMX512-A protocol, allowing dimming stations and other control devices to be discovered through a DMX512 network, and then configuring, status monitoring, and managing intermediate and line end devices.

It allows two-way communication between the lighting device or system controller and the connected RDM compatible device through the standard DMX. This protocol will allow these devices to be configured, monitored, and managed in a manner that does not interfere with the normal operation of standard DMX512 devices that do not recognize the RDM protocol.
Allow a controller or test device to find other devices that can be RDM, such as computer lights or dimming cabinets, and remotely manage them through this connection intelligence. Including the ability to remotely set the initial address of the DMX512, query the device's errors or statistics, and achieve most of the configuration settings that are usually done on the front panel of the device. RDM can run with the new RDM device or any original DMX512 product on the same data link without any performance impact. Since RDM runs on the first team DMX512 link, the only infrastructure upgrade required by RDM is to upgrade the existing data distributor to implement a two-way mode to support RDM.

The RDM information is transmitted through the first pair of DMX512 data channels. RDM uses packets that include non-zero initial codes to start and control communications. This alternating(rotating) session and waiting for indicative responses is performed in a semi-duplex format. The second data pair is not used for any RDM function.

Two-way data transmission-each vendor's equipment can exchange data, Art-net can only transmit data, can not exchange with each other.

Its functions are as followed:

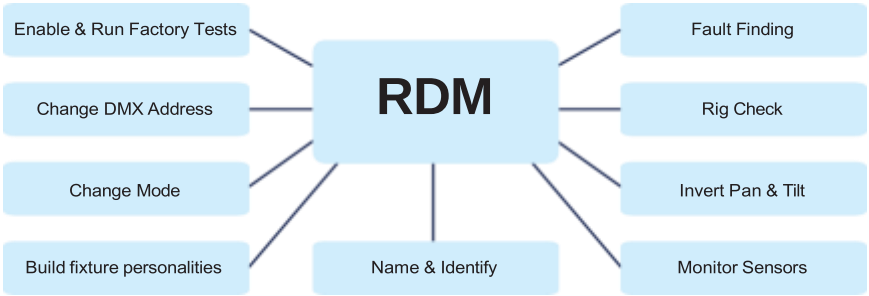

Connection

DMX connection

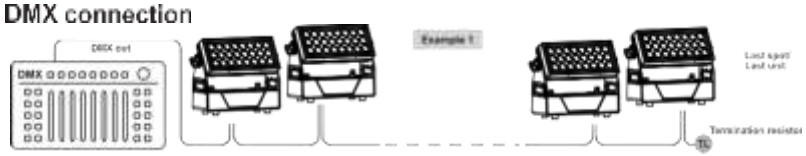

Master / Slave connection

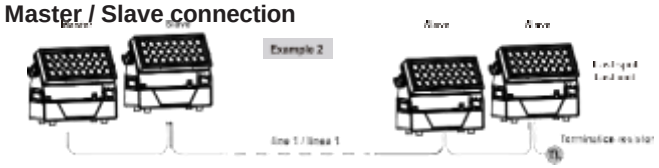

Wireless connection

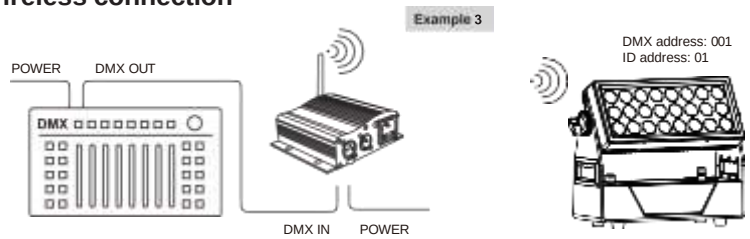

Connection

Press “ENTER” and then press “UP” or “DOWN” to “SET UP” .

Press “ENTER” and then press “UP” or “DOWN” to “Wireless rel” is displayed, press “ENTER”.Then press “DMX Mode” is ok.

Then, until Green wireless signal is showed. Then Wireless DMX connected success.

About the condition of wireless signal, green means the setting is successful,red means the signal is unsuccessful.

Release wireless DMX signal

Press “ENTER” and then press “UP” or “DOWN” to “Wireless rel”.

Press “ENTER” and then press “UP” or “DOWN” to “Release +/-”,and then long press “UP” or “DOWN” about 5-6 seconds. Until “clear is success” is showed. It means release signal successfully.

If you want to set up the magnetic frost filter,please follow the steps as below:

1. Please put the magnetic frost filter onto the top cover of the lights.Please don’t worried about the filter will be fallen down,because the top cover and the filter are have magnets.

2. Please put the hook of the safety rope hangs on the hole of the handle of the light.Please make sure the safety rope on the side of the screen then the hook can be hung.

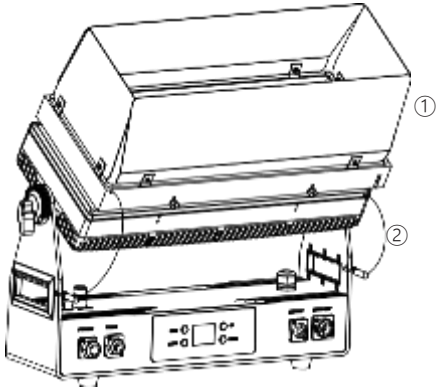

If you want to set up the barndoor,please follow the steps as below:

1. There are 4 holes on the top cover of the lights,please put the screws of the barndoor to connect these 4 holes then tighten them.

2. Please put the hooks of the two safety ropes hang on the holes of the handles of the light.Please make sure the safety rope on the side of the screen then the hook can be hung.

Displayer Introduction

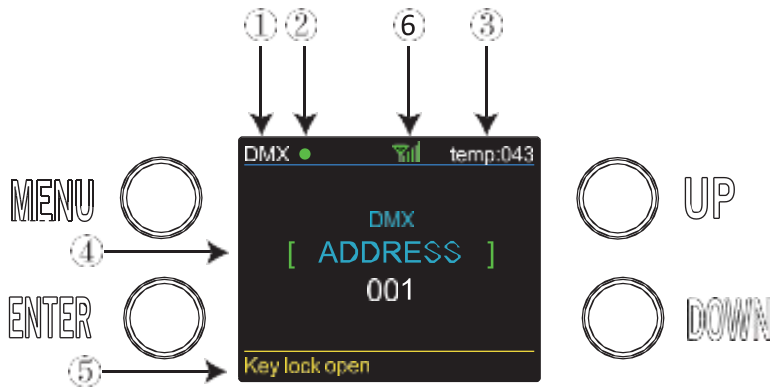

1. When you enter DMX Mode,it will be showed DMX,when you enter SLAVE Mode,it will be showed SLAVE.
2. This shows the condition of signal transmission. Green is connected.Red is disconnected.
3. This shows the temperature of the lights.
4. This shows the menus you can select.
5. This shows the condition of key lock. “Key lock open” means it is open and “Key lock off” means it is close.
6. This shows the condition of wireless signal. Green is connected.Red is disconnected.

While DMX and Wireless signal are green,it means DMX Mode and Wireless are connected.

While DMX shows red but Wireless signal shows green,it means DMX Mode is disconnected and Wireless is connected.

CABLE CONNECTORS

Cabling must have a male XLR connector on one’s end and a female XLR connector on the other’s end.

DMX connector configuration

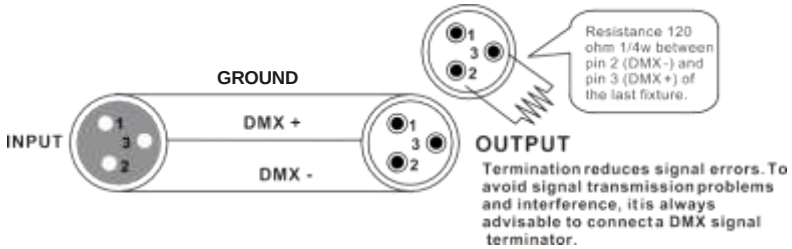

Caution:Do not allow contact between the ground and the fixture’s chassis ground. Grounding the ground can cause a ground loop, and your fixture may perform erratically. Test cables with an ohm meter to verify positive pole and to make sure the pins are not grounded or shorted to the shield or each other.

3-PIN TO 5-PIN CONVERSION CHART

Please note if you use a controller with a 5 pin DMX output connector, you need to use a 5 pin to 3 pin adapter. The chart below details a proper cable conversion:

3-PIN TO 5-PIN CONVERSION CHART

Conductor	3 Pin Female (output)	5 Pin Male (Input)
Ground/Shield	Pin 1	Pin 1
Data (-) signal	Pin 2	Pin 2
Data (+) signal	Pin 3	Pin 3
Do not use		Do not use
Do not use		Do not use

channel	value	function
11	0 - 255	ID address (see details in the following table)

Channel 11 (Id address set)

0--9	all Ids	170--179	Id17	223	Id34	240	Id51
10--19	Id1	180--189	Id18	224	Id35	241	Id52
20--29	Id2	190--199	Id19	225	Id36	242	Id53
30--39	Id3	200--209	Id20	226	Id37	243	Id54
40--49	Id4	210	Id21	227	Id38	244	Id55
50--59	Id5	211	Id22	228	Id39	245	Id56
60--69	Id6	212	Id23	229	Id40	246	Id57
70--79	Id7	213	Id24	230	Id41	247	Id58
80--89	Id8	214	Id25	231	Id42	248	Id59
90--99	Id9	215	Id26	232	Id43	249	Id60
100--109	Id10	216	Id27	233	Id44	250	Id61
110--119	Id11	217	Id28	234	Id45	251	Id62
120--129	Id12	218	Id29	235	Id46	252	Id63
130--139	Id13	219	Id30	236	Id47	253	Id64
140--149	Id14	220	Id31	237	Id48	254	Id65
150--159	Id15	221	Id32	238	Id49	255	Id66
160--169	Id16	222	Id33	239	Id50		

While DMX shows green but Wireless signal shows red,it means DMX Mode is connected and Wireless is disconnected.

While DMX and Wireless are show red,it means DMX Mode and Wireless are disconnected.

While the letters and number shows change from white to yellow,it means the temperature beyond max temperature of default settings.

While the letters and number shows Error,it means have some problems of temperature.

Features

OPTICALS

- Light Source: 24*10W, 4 in 1 RGBW LEDs
- Lens: 20° , 40°

ELECTRICAL

- Power consumption: 260W
- Voltage: 100-240V 50/60Hz or battery 22,2VDC – 16Ah
- Charging:4 hours
- Discharging:3 hours for full power

CONTROL

- DMX channels: 2, 3, 5, 8 & 11 CH
- Run Mode: DMX 512 /Master Slave/Auto Run
- Built-in Effect: color mixing, variable color chasing, strobing and fading.
- Maximum 66 ID setting for easy separately control
- Wireless DMX transceiver Wireless Solution

SOFTWARE

- 10 internal programs and 10 customerize programs
- 4 different dimming curve
- 11 internal programs and 11 customerize programs
- Smart temperature control
- Working time record
- IR Remote Controller

PHYSICAL

- Material: Aluminum body
- Painting: an-ti salt & an-ti UV
- TFT displayer with four buttons
- Key lock for buttons
- IP65
- Temperature: -40℃~45℃
- N.W: 12 KG
- G.W: 15 KG
- Dimensions: 460 x 168 x 314.5 mm

channel	value	function
7	160 - 163	Just blue
	164 - 167	Surprise pink
	168 - 171	Scarlet
	172 - 175	Surprise peach
	176 - 179	Light peach
	180 - 183	Warm white 2
	184 - 187	Mauve
	188 - 191	Bright blue
	192 - 195	Alice blue
	196 - 199	Rose indigo
	200 - 203	Urban blue
	204 - 207	Cool blue
	208 - 211	Light salmon
	212 - 215	Mayan sun
	216 - 219	Cherry rose
	220 - 222	Flesh pink
	223 - 225	Skelton exotic sangria
8	0	No functions
	1 - 23	2500 K
	24 - 47	3000 K
	48 - 71	3500 K
	72 - 95	4000 K
	96 - 119	4500 K
	120 - 143	5000 K
	144 - 167	6000 K
	168 - 191	7000 K
	192 - 215	8000 K
	216 - 225	9000 K
	226 - 255	10000 K
9	0 - 7	No function
	8 - 23	AUTO 1
	24 - 39	AUTO 2
	40 - 55	AUTO 3
	56 - 71	AUTO 4
	72 - 87	AUTO 5
	88 - 103	AUTO 6
	104 - 119	AUTO 7
	120 - 129	AUTO 8
	130 - 151	AUTO 9
	152 - 168	AUTO 10
	169 - 183	AUTO 11
	184 - 199	AUTO 12
	200 - 255	AUTO 13
10	0 - 255	Auto modes speed from slow to fast

DMX 11 channel

channel	value	function
1	0 - 255	Master Dimmer
2	0 - 9	No functions (LED ON)
	10 - 189	Strobe from slow to fast
	190 - 199	No functions (LED ON)
	200 - 249	Random strobe from slow to fast
	250 - 255	No function (LED ON)
3	0 - 255	Red dimmer
4	0 - 255	Green dimmer
5	0 - 255	Blue dimmer
6	0 - 255	White dimmer
7	0 - 23	Nessuna funzione
	24 - 27	Red
	28 - 31	Green
	32 - 35	Blue
	36 - 39	Yellow
	40 - 43	Cyan
	44 - 47	Magenta
	48 - 51	White
	52 - 55	Orange
	56 - 59	Pink
	60 - 63	Violet
	64 - 67	Aquamarine
	68 - 71	Sky blue
	72 - 75	Full white
	76 - 79	Cool white
	80 - 83	Warm white
	84 - 87	White 3200
	88 - 91	White 2500
	92 - 95	Yellow 2
	96 - 99	Straw
	100 - 103	Orange 2
	104 - 107	Light rose
	108 - 111	Dark pink
	112 - 115	Magenta 2
	116 - 123	Med blue green
	124 - 127	Blue 2
	128 - 131	Bright pink
	132 - 135	Medium blue
	136 - 139	Golden amber
	140 - 143	Deep golden amber
	144 - 147	Pale lavender
	148 - 151	Apricot
	152 - 155	Med blue red
	156 - 159	Chocolate

Programme Menu

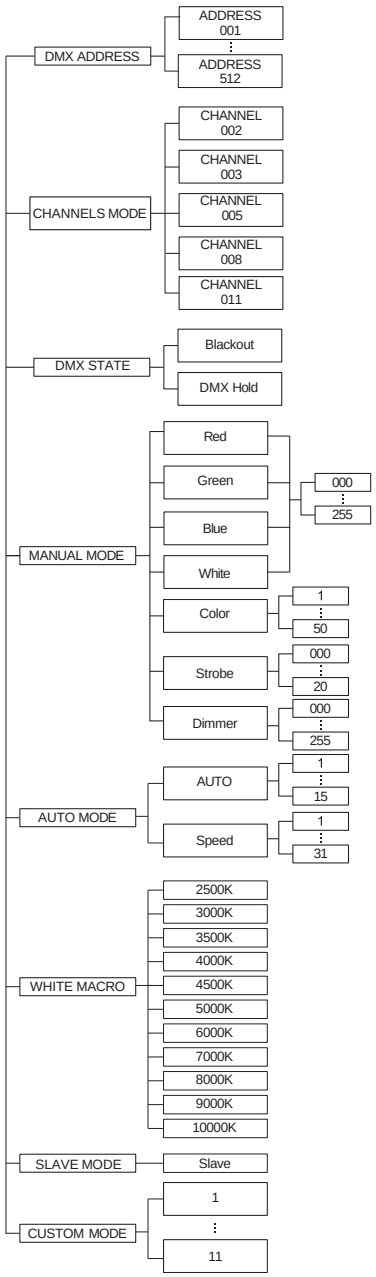

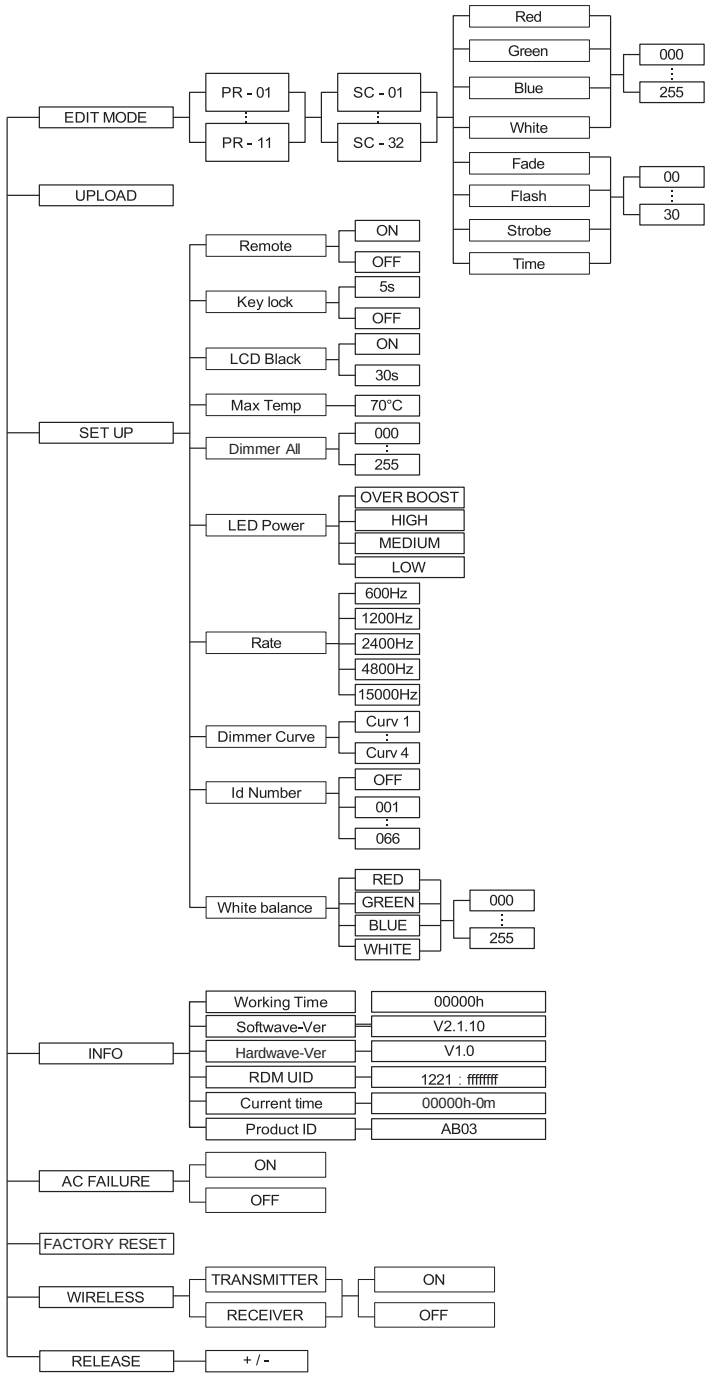

DMX 3 channel

channel	value	function
1	0 - 255	Hue
2	0 - 255	Saturation
3	0 - 255	Value(brightness)

DMX 5 channel

channel	value	function
1	0 - 255	Master dimmer from 0 to 100%
2	0 - 255	Red dimmer
3	0 - 255	Green dimmer
4	0 - 255	Blue dimmer
5	0 - 255	White dimmer

DMX 8 channel

channel	value	function
1	0 - 255	Master dimmer from 0 to 100%
2	0 - 9	No functions (LED ON)
	10 - 189	Strobe from slow to fast
	190 - 199	No functions (LED ON)
	200 - 249	Random strobe from slow to fast
	250 - 255	No function (LED ON)
3	0 - 255	Red dimmer
4	0 - 255	Green dimmer
5	0 - 255	Blue dimmer
6	0 - 255	White dimmer
7	0 - 7	No function
	8 - 23	AUTO 1
	24 - 39	AUTO 2
	40 - 55	AUTO 3
	56 - 71	AUTO 4
	72 - 87	AUTO 5
	88 - 103	AUTO 6
	104 - 119	AUTO 7
	120 - 129	AUTO 8
	130 - 151	AUTO 9
	152 - 168	AUTO 10
	169 - 183	AUTO 11
	184 - 199	AUTO 12
	200 - 255	AUTO 13
8	0 - 255	Auto modes speed from slow to fast

channel	value	function
	140 - 143	Medium yellow
	144 - 147	Apricot
	148 - 151	Pale yellow
	152 - 155	Pale Lavender
	156 - 159	Pale yellow 2
	160 - 163	Evening blue
	164 - 167	Surprise pink
	168 - 171	Scarlet
	172 - 175	Surprise peach
	176 - 179	Light peach
	180 - 183	Warm white 2
	184 - 187	Mauve
	188 - 191	Bright blue
	192 - 195	Alice blue
	196 - 199	Rose indigo
	200 - 203	Urban blue
	204 - 207	Cool blue
	208 - 211	Light salmon
	212 - 215	Mayan sun
	216 - 219	Cherry rose
	220 - 222	Flesh pink
	223 - 255	Full white
2	0	No functions
	1 - 23	2500 K
	24 - 47	3000 K
	48 - 71	3500 K
	72 - 95	4000 K
	96 - 119	4500 K
	120 - 143	5000 K
	144 - 167	6000 K
	168 - 191	7000 K
	192 - 215	8000 K
	216 - 225	9000 K
	226 - 255	10000 K

Operation

DMX ADDRESS-In this menu, you can connect several pieces of lights with DMX cable and control with control console.
1. Press “ENTER” and then press “UP” or “DOWN” to “DMX ADDRESS”.
2. Press “ENTER” and” xxx” will be showed” represents the showed address. You can press “UP” or “DOWN” to select your desired DMX address.

CHANNELS MODE-In this menu, you can select the channels you need.
1. Press “ENTER” and then press “UP” or “DOWN” to “CHANNELS MODE”.
2. Press “ENTER” and ”Channel [xx]” will be showed, You can press “UP” or “DOWN” to select your desired Channels mode.

DMX STATE-In this menu, you can select the DMX signal you desired.
1. Press “ENTER” and then press “UP” or “DOWN” to “DMX STATE”.
2. Press “ENTER” and you can choose 2 items as below:
1) **BLACKOUT** - it means cut off the DMX signal
2) **DMX HOLD** - it means connect DMX signal.

Manual MODE-In this menu, you can select Red, Green, Blue, White ,Strobe ,Color and Dimmer you desired.
1. Press “ENTER” and then press “UP” or “DOWN” to “MANUAL MODE”.
2. Press “ENTER” and there has 7 options you can choose as below:
1) **Red** - You can adjust the red brightness in this menu.
2) **Green** - You can adjust the green brightness in this menu.
3) **Blue** - You can adjust the blue brightness in this menu.
4) **White** - You can adjust the white brightness in this menu.
5) **Strobe** - It provides 20 kinds of strobe modes for you choose.
6) **Color** - It provides 70 kinds of color modes for you choose.
7) **Dimmer** - You can adjust all brightness in this menu.

AUTO MODE-In this menu, you can select your desire AUTO Mode and adjust the running speed.
1. Press “ENTER” and then press “UP” or “DOWN” to “AUTO MODE”.
2. Press “ENTER” then you can choose 2 items as below:
1) **SPEED** - It provides “01-31” for you choose.
2) **AUTO MODE** - It provides “AUTO 1- AUTO 15” for you choose.

CAL WHITE-In this menu, you can choose 11 different white colors.
1. Press “ENTER” and then press “UP” or “DOWN” to “CAL WHITE”.
2. Press “ENTER” and there are 11 pre-programmed white colors that can be edited by adjusting the values of “**Red (0~255)**”, “**Green (0~255)**”, “**Blue (0~255)**”, “**White(0~255)**”.

SLAVE MODE-In this menu, you can select one light as the MASTER light and other lights in SLAVE Mode will run following the MASTER light.
1. Press “ENTER” and then press “UP” or “DOWN” to “SLAVE Mode”.
2. Press “ENTER” and “SLAVE” will be showed, then press “ENTER” to select.

CUSTOM MODE-In this menu, you can select the Pre- Programmed Modes.
1. Press “ENTER” and then press “UP” or “DOWN” to “CUSTOMER MODE”.
2. Press “ENTER” and there are 11 pre-programmed modes edited for you choose.

EDIT MODE-In this menu, you can edit your desired AUTO program.
1. Press “ENTER” and then press “UP” or “DOWN” to “EDIT MODE”.
2. Press “ENTER” and edit the custom programs from “PR-01” to “PR-11”.And there are 32 scenes that can be edited in each custom program.
3. You can edit a scene by adjusting the values of “Red (0~255)”, “Green (0~255)”, “Blue (0~255)”, “White(0~255)”, “Fade (0~30)”, “Flash(0~30)”, “Strobe (0~30)” and “Time (0~30)” .Then the data will be saved after 5s when you pressed “ENTER”.

UPLOAD-In this menu, you can connect several pieces of lights with MAX cables and set one light as MASTER and others as SLAVE. Then upload the custom program in the MASTER light to the SLAVE lights.
1. Press “ENTER” and then “UP” or “DOWN” to “UPLOAD”.
2. Press “ENTER” to upload the custom programs from the MASTER light to the SLAVE lights.

SET UP-In this menu, you can adjust the values of the functions.
1. Press “ENTER” and then press “UP” or “DOWN” to “SET UP”.
2. Press “ENTER” and there has 10 options you can choose as below:
1) **LCD Black** - You can select “ON” or “30s” to make the display screen keeps on all the time or turns black after 30s.
2) **Key Lock** - You can select “OFF” or “5s” to make the Key Lock keeps off all the time or turns on after 5s.
3) **ID number** - You can select “1-66” to adjust the values of Channel 12 to the corresponding scope and control the lights individually with control console. You can set “OFF” if you don’t need this function.
4) **Dimmer Curve** - It provides 4 kinds of dimmer curves for you choose.
5) **Rate** - It provides 6 kinds of refresh rates for your choose.
6) **Dimmer All** - You can adjust all brightness of colors.
7) **Max temp** - You can set the your desired Max working temperature of the lights in this menu. When the working temperature beyond the max temperature of default setting, the color of letter “Temp XX” will shows from white to yellow. Meanwhile, the lights will adjust the working temperature automatically.
8) **Bat Usage** - It provides 4 kinds of battery using time for your choose.
9) **Remote** - You can turn on/off the IR control in this menu.
10) **White Balance** - You can select the desired values by setting “**Red (0~255)**” , “**Green (0~255)**” , “**Blue (0~255)**” and “**White(0~255)**”.

INFORMATION-In this menu, you can learn about the information of Software, Hardware, Working time, RDM UID, Current time and Product ID of the lights.
1. Press “ENTER” and then press “UP” or “DOWN” to “INFORMATION”.
2. Press “ENTER” and you can see 5 items as below:
1) **Software** - This item displays the Software information.
2) **Hardware** - This item displays the Hardware information.
3) **Working time** - This item displays the working hours of the light.
4) **Current time** - This item displays the current working hours of the light.
5) **Product ID** - This item displays the product information.

AC FAILURE-In this menu, you can set this function as you need.
1. Press “ENTER” and then press “UP” or “DOWN” to “AC FAILURE”.
2. Press “ENTER” you can choose to turn on/off. It will show dimmer all if has an accident when it is opened,. Also it will not show any function when closed.

FACTORY RESET-In this menu, you can reset all the value of the system.
1. Press “ENTER” and then press “UP” or “DOWN” to “FACTORY RESET”.
2. Press “ENTER” to reset all the values of the system.

WIRELESS-In this menu, you can set the Wireless signals.
1. Press “ENTER” and then press “UP” or “DOWN” to “WIRELESS”.
2. Press “ENTER” and will shows 2 items as below:
1) **TRANSMITTER** - you can set “ON” or “OFF” of launch in this menu.
2) **RECEIVER** - you can set “ON” or “OFF” of receive in this menu.

RELEASE-In this menu, you can clear the Wireless DMX signal.
1. Press “ENTER” and then press “UP” or “DOWN” to “RELEASE”.
2. Press “ENTER” and you can see “Release +/-”,then you can press “UP” or “DOWN” to clear the wireless DMX signal.

DMX control mode

DMX 2 channel

channel	value	function
1	0 - 23	No function
	24 - 27	Red
	28 - 31	Green
	32 - 35	Blue
	36 - 39	Orange
	40 - 43	Cyan
	44 - 47	Magenta
	48 - 51	White
	52 - 55	Yellow
	56 - 59	Pink
	60 - 63	Violet
	64 - 67	Aquamarine
	68 - 71	Pale blue
	72 - 75	Full white
	76 - 79	Cool white
	80 - 83	Day light
	84 - 87	Warm white
	88 - 91	Tungsten
	92 - 95	Medium amber
	96 - 99	Straw
	100 - 103	Spring yellow
	104 - 107	Light rose
	108 - 111	Dark pink
	112 - 115	Magenta 2
	116 - 119	Med blue green
	120 - 123	Med blue green 2
	124 - 127	Blue 2
	128 - 131	Bright pink
	132 - 135	Medium blue
	136 - 139	Violet