2R Moving Head Beam

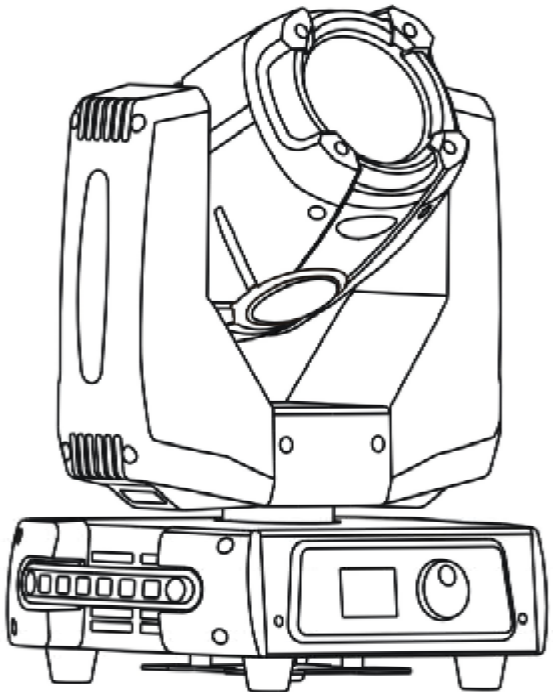

WEIGHT 15KG

COLOR TEMPERATURE 9300K

POWER 250W

Item

Item 2

1.Product introduce 3

1.1 Fixture Size 4

2.Safety information ..... …..5

2.1 Anti-high temperature 6

2.2 Burst Prevention 6

2.3 To prevent falling wounding 6

2.4 UV protection and the bulb explosion 6

2.5 Prevention of electric shock 6

2.6 to prevent burning or fire 6

3.Packing and shipping 7

3.1 packaging randomized accessories project 7

3.2 transport the protection locks. 7

3.3 device packaging 7

3.4 Unpacking. 7

4.Installation standards ..... …...8

4.1 device fixed to the bracket 8

4.2 rigging installation 8

4.3 connected devices 8

5.AC power..... ……9

5.1 Fuse.....8

5.2 Power connection 8

6.Lamp.....……10

6.1Bulb Description 10

6.2 changing a light bulb 10

7.Channels..... .....……12

8. Clear and Maintenance…….....…….....…..……..15

9. PCB Board….....…….....…….....…..……..16

STATEMENT

The product is good packing when ship out the factory. All users should strictly abide by the warnings and instructions stated in this manual, any damage and results due to misuse and the neglect of this operating manual will be excluded from the deal responsibility this manual will not informed in additionally if have technical changes.

PRODUCT DESCRIPTION

Thank you for choose this BEAM 2R products, this model is the moving head light which is the latest development of the smart, efficient products, beautiful shape, smooth R & D, combined with the advanced technology of today's stage lighting products with international advanced electronic control technology and excellent user-friendly industrial design , fully comply with CE standard, accepted international standard DMX512 signal mode.

This moving head lights, use ceramic luminescent film reflector as a condenser system, coupled with the high-quality optical lens components, broadband voltage, a clear pattern, sharp and uniform output light efficiency. Intelligent LED display module, the English language selection mode, intuitive operating menu, shortcut.

This Beam spot, have 16/20 international standard DMX512 channels optional Horizontal scan: 540 ° vertical scanning 270 ° (16bit precision scanning) electronic correction, LCD display, can be inverted 180 °, the color wheel is combined with white and 14 colors. Gobo wheel: 17 patterns + white effect round by 8 facet prism and atomization function. 0-100% mechanical dimmer, support mechanical strobe and variable strobe effect, strobe macro function. The optical system of the lens group electric focusing, the beam angle of 0 to 4° with overheating protection function.

This Moving head lights are widely used in television, disco, dance halls, nightclubs,performances and other professional venues

1. PRODUCT INTRODUCE

1.1 FIXTURE SIZE

Size：：302×346×502mm

Gross Weight：18.2KG

Net weight：15KG

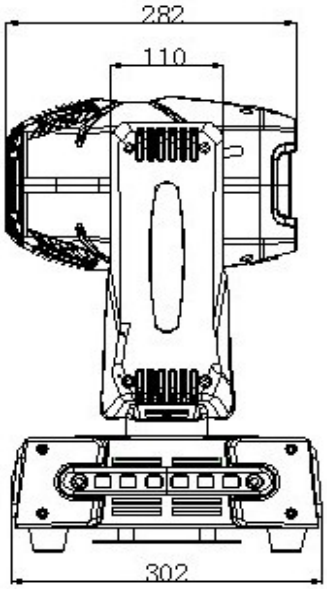

eco stage 2R

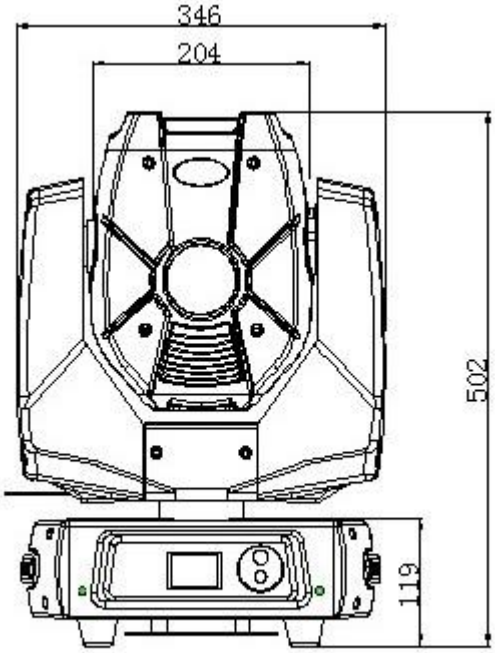

2. SAFETY INFORMATION

Safety warning:

This product is only suitable for professional use, and does not apply to security for other purposes. After you got the lights, please check the package whether have any damage caused by transportation. If there is any damage, do not use this fixture, and please contact the dealer or manufacturer as soon as possible.

This product is only suitable for indoor, IP20 protection class. Lamps should be kept dry to avoid Moisture, overheating or dusty environment. Prevent lamps come into contact with water or any other liquid.

The use of this product should pay attention to: fire, heat, electric shock, ultraviolet radiation, the lamp to explode or

Shedding caused serious or fatal injury.

Need to read the instructions before use energized or installing.

Follow through the operation of security methods and pay attention to the warning signs on the specification and equipment. If you have any problem for how to safely operate the equipment. Please contact your dealer.

eco stage 2R

2.1 ANTI-HIGH TEMPERATURE

ta =40°C

Please don't use the equipment if the temperature above 40℃

2.2 BURST PREVENTION

The lens should be changed if had damaged or any problems. Don't change the non-original manufacturer lens.

Len size: ¢119mm×23mm

2.3 TO PREVENT FALLING WOUNDING

Please don't move the package by one person only.

When Hang the fixture, please must verify that the facilities to be able to withstand the weight of the lamps at least 10 times more.

Please make sure the Mounting hardware is strong enough no any damage, and insurance for the safety rope as auxiliary security fixed in other facilities will need to verify before installation. Installing or removing the equipment, to make the pulley below the work location

2.4 UV PROTECTION AND THE BULB EXPLOSION

Prohibit straight viewpoint with exposed bulbs to avoid UV damage to the eyes;

Do not use the equipment without the lens screen and the lid;

The lens and the light head covers should be timely replaced if any damage to rupture

The Fixture should be used with the protection screen together.

2.5 PREVENTION OF ELECTIC SHOCK

The electrical connection must only be carried out with corresponding qualifications;

Before installing, make sure you use the power voltage lamps must comply with the identified power, voltage and have an overload or leakage protection;

Each lamp must be properly grounded, installed in accordance with the relevant standards;

Cut off the power when stall or replace the lamp and the fuse;

Prohibit the use of a lightning storm or wet environment.

2.6 TO PREVENT BURNING OR FIRE

1,The fixture can be mounted directly on the surface of ordinary combustible material.

2. Do not short-circuit temperature protection switch or fuse, use the specified type of fuse.

3. The equipment must be installed away from inflammable and explosive materials.

4. The equipment should be projected range of 3 meters away objects and projectiles temperature less than 60 ° C; .

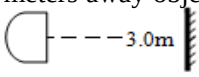

5. Fan or ventilation, at least in the range of 0.5 meters can not be an obstacle.
6. Do not place any object on the lens.
7. Handling at least allow the device to cool for 20 minutes.
8. Do not replace the non-original parts.

3. PACKAGE

3.1 ATTACHMENT

Beam 2R packed with fly-case of one in one ,two in one ,or carton box.

Attach follow accessory.

ACCESSORY

CONTENT	QUANTITY
USER MANUL	1 piece
HANG FIXTURE	2 pcs
SIGNAL CABLE	1 piece

PACAKGE SIZE

CARTON BOX	37×42×56cm
FLY-CASE 1 IN 1	44×47×72cm
FLY-CASE 2 IN 1	82×47×72cm

3.2 TRANSPORT PROTECT LOCK

In order to protect the light, there is a protect lock; During the transport , the lock will closed keeping the item in safety state.

3.3 ABOUT PACK STAGE

1. Before packed, make sure power is off, and wait for at least 20mins for cooling down.
2. Before clean the fixture, make sure X, Y axis protect lock closed.
3. After packed by plastic bag, high-lift the fixture with two handles besides the product. put the product into the fly-case up-side-down.
4. After packed the product, put the accessory into the accessory case, then closed and lock the fly-case.
5. Fly-case only up stacked two layers. Prohibited upside down
6. When packed with carton box, equipment should be put into the foam first, then set into a carton, pay attention to the vertical position.

3.4 UNPACKING

Note: Before unpacking check the damage is whether due to the transportation or not, if you find any such damage, please do not use this item, and contact with the dealer or manufacturer as soon as possible.

1. Open the fly-case, and discover the inside plastic bag.
2. High-lift the product by two handles beside the bottom base and move it out.

3. Before power on, make sure you have opened the X, Y axis lock!

4、INSTALL STRANDARD

4.1 INSTALL LOCK

Beam 2R can be placed on the stage, or mounted in an arbitrary direction of the truss. Two fast locks system could fix the item easily .

4.2 EQUIPMENT FIXED

1. Before installation must verify the fast lock is keep in good state, and can withstand at least 10 times the weight of product. Verify that the building can withstand at least 10 times of the total weight of the product and accessory equipments.
2. Fix the hang fixture into the hole, which located on the base of the price.
   Seize handle of fasteners, clockwise rotate 1/4 turn and lock. Installed other one fastener in the same method.
3. Using the safety cable which can withstand 10 times the weight of the equipment.
4. Make sure the X,Y protect locks are opened, Verify that within 3 meters there is no combustibles .

WARNING

Fixture must use two fixing devices, and make sure the fixing device have locked! And only fully clockwise rotate 90 ° can lock the hang fixture! Do remember plus a safety rope, and do not connect the safety rope to plastic handle. It should be connect to the hole on the base!

4.3 FIXTURE CONNECT

Attention! One product only can accept one input one output.

Beam 2R DMX cable include 3 contact pins:

Pin 1, FOR GROUND; Pin 2 connected to the negative polarity signal; The pin 3 connected to the positive polarity signal.

DMX512 cable must use the professional shielded twisted pair cable; standard loudspeaker cable is not reliable to control the long-range data. 24AWG cable is suitable for more than 300 meters long-distance signal transmission and must add\ DMX 512 signal amplifier.

Do not use two outputs to separate the connection, if separate a continuous connection to branch, DMX512 splitter is necessary.

If use the DMX512 splitter. At first connect DMX512 Splitter input terminal to controller .And then connected from the splitter output terminal to next device.

Do as above guide to connect other device, and finally coupled with terminal insertion as following:

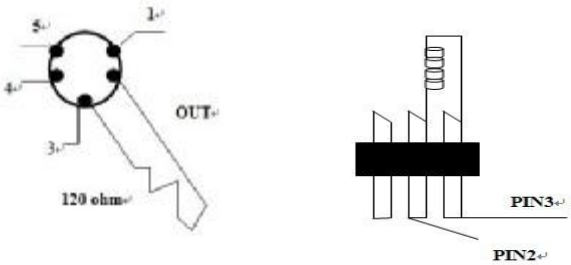

5、 ALTERNATING CURRENT POWER SUPPLY

5.1 VOLTAGE, POWER, FUSE SPECIFICATION

Input Voltage	Total Power	Frequency
110~240V	350W	50/60Hz

Fuse voltage	Electronic current	Specification
250V	6A	5×20

5.2 POWER PROTECT

The equipment must be operated by professionals; Make sure that the voltage of power supply must be comply with the voltage identified on the lamp, and must have an overload or leakage electrical protection.

ATTENTION!

Factory has equipped the standard 3 pin plug socket. Connect the power supply as below table.

If lamp cable is damaged, replacement should be operate by factory or qualified staff.

Any question, please contact professionals or talk to a qualified electrician.

Live wire(L)	Null(N)	Ground wire	
RED	BLUE	Yellow +Green	

eco stage 2R

6、LAMP

6.1 LAMP DESCRIPTION

LAMP MODEL	POWER OF LAMP	LIFE/HOUR	COLOR TEMPERATURE
Philips MSD	132W	2200 HOURS	9300K
Osram HRI	132W	2200 HOURS	9300K
YODN MSD	132W	2200 HOURS	9300K

WARNING!
There is a safety hazard or damage if install similar bulb To reduce the risk of damage to light ,do change the lamp before using time over 90% of lamp life .

6.2 LAMP REPLACE

Attention! When replace the lamp is forbidden to touch lamp with bare hand, to avoid the greasy dirt stains filament. filament must be kept clean

1. Disconnect the power. Before replace lamp, fixture need 20 minutes for lamp cooling. Fasten the head with Y axis protect lock in 60 ° position.

2, Use cross screwdriver to open the light body cover, remove the fan bracket, pull out the bulb cable as this picture show:

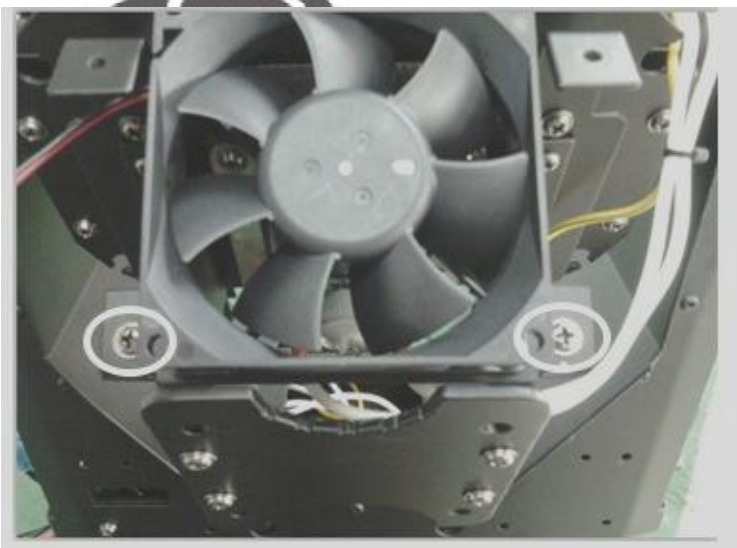

Stage 2R

3. Please loose the connect wire as the following.

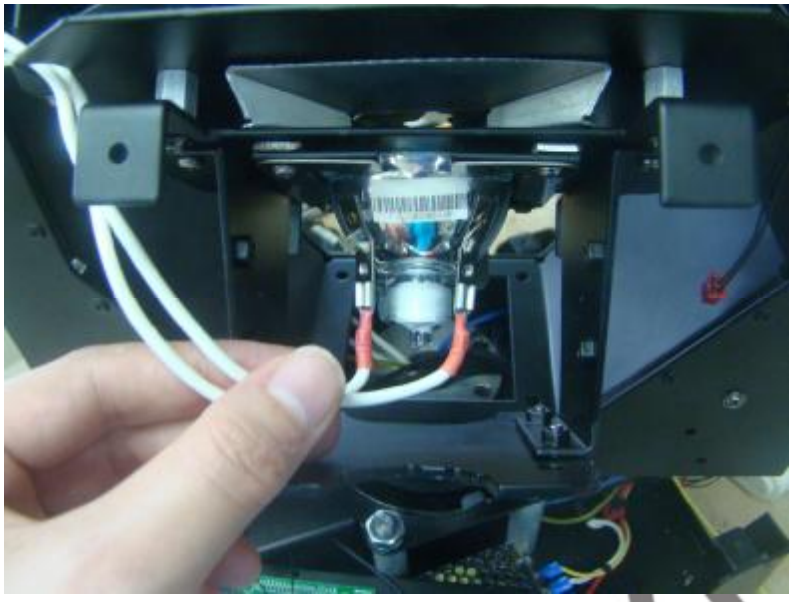

4. Please loose the screws installed in the metal pieces as following.

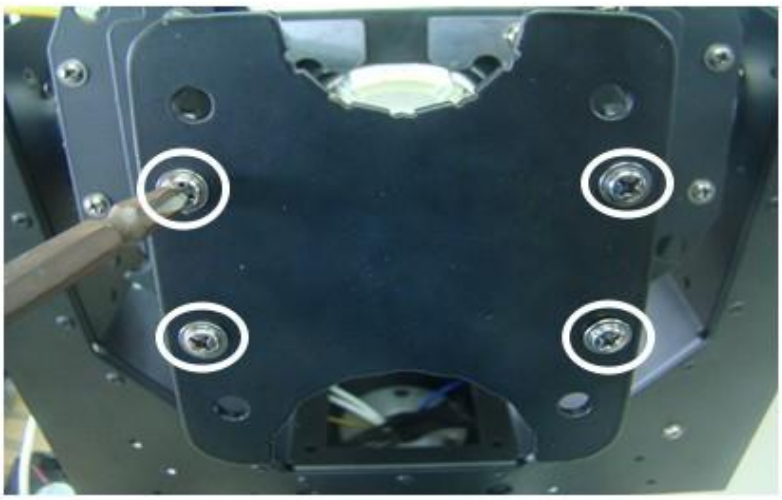

5. Press the lamp reflector **slightly** use one finger, and press the lamp bottom slightly use another finger. So the lamp will loose from the stand.

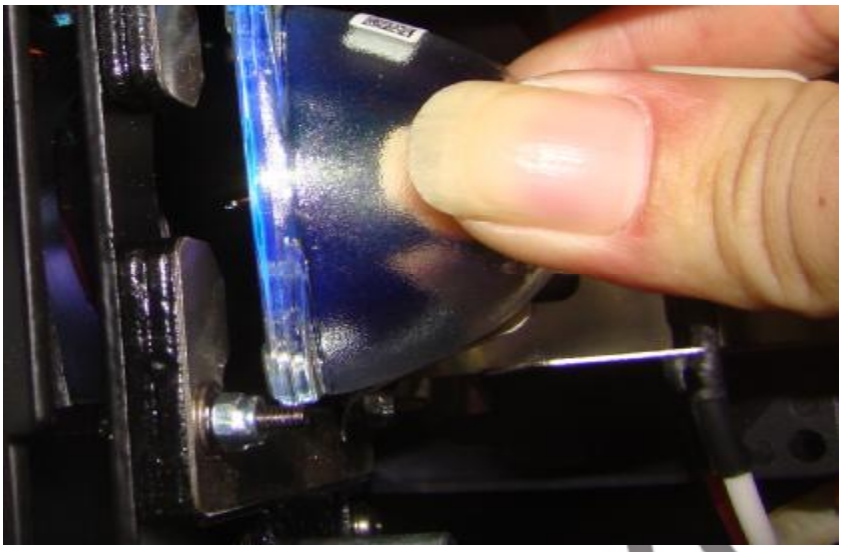

6, Repeat the above steps on the contrary action to install the lamp.

7. CHANNELS

Channels	DMX value	Detail
1CH Color	0~4	White
	5~8	White＋Color 1
	9~12	White 1
	13~17	Color 1＋Color 2
	18~21	Color 2
	22~25	Color 2＋Color 3
	26~29	Color 3
	30~34	Color 3＋Color 4
	35~38	Color 4
	39~42	Color 4＋Color 5
	43~46	Color 5
	47~51	Color 5＋Color 6
	52~55	Color 6
	56~59	Color 6＋Color 7
	60~63	Color 7
	64~68	Color 7＋Color 8
	69~72	Color 8
	73~76	Color 8＋Color 9
	77~81	Color 9

	82~85	Color 9＋Color 10
	86~89	Color 10
	90~93	Color 10＋Color 11
	94~98	Color 11
	99~102	Color 11＋Color 12
	103~106	Color 12
	107~110	Color 12＋Color 13
	111~115	Color 13
	116~119	Color 13＋Color 14
	120~123	Color 14
	124~127	Color 14＋Color 15
	128~255	Color 15
2CH Strobe	0~3	White
	4~103	Slow strobe to fast strobe
	104~107	White
	108~207	Fast strobe to slow strobe
	208~212	White
	213~225	Random slow strobe
	226~138	Random medium strobe
	239~251	Random fast strobe
	252~255	White
3CH Dimmer	0~255	0~100% Linear
4CH Gobo	0~3	White
	4~7	Gobo 1
	8~11	Gobo 2
	12~15	Gobo 3
	16~19	Gobo 4
	20~23	Gobo 5
	24~27	Gobo 6
	28~31	Gobo 7
	32~35	Gobo 8
	36~39	Gobo 9
	40~43	Gobo 10
	44~47	Gobo 11
	48~51	Gobo 12
	52~55	Gobo 13
	56~59	Gobo 14
	60~63	Gobo 15
	64~67	Gobo 16
	68~71	Gobo 17
	72~113	Gobo change from fast to slow
	114~117	Stop
	118~159	Gobo change from slow to fast

eco stage 2R

	160~166	Gobo 2 shaking from slow to fast
	167~172	Gobo 3 shaking from slow to fast
	173~179	Gobo 4 shaking from slow to fast
	180~185	Gobo 5 shaking from slow to fast
	186~191	Gobo 6 shaking from slow to fast
	192~198	Gobo 7 shaking from slow to fast
	199~204	Gobo 8 shaking from slow to fast
	205~211	Gobo 9 shaking from slow to fast
	212~217	Gobo 10 shaking from slow to fast
	218~223	Gobo 11 shaking from slow to fast
	224~230	Gobo 12 shaking from slow to fast
	231~236	Gobo 13 shaking from slow to fast
	237~243	Gobo14 shaking from slow to fast
	244~249	Gobo 15 shaking from slow to fast15
	250~255	Gobo 16 shaking from slow to fast
5CH Prism	0~127	White
	128~255	Prism insert
6CH Prism Rotation	0~20	Angle 0
	21~41	Angle 90
	42~62	Angle 180
	63~83	Angle 270
	84~104	Angle 360
	105~126	Angle 450
	127	Angle 540
	128~190	Fast to slow Rotation
	191~192	Stop
	193~255	Slow to fast rotation
	0-14	white

eco stage 2R

	15-32	Effect 1
	33-46	Effect 2
	47-63	Effect 3
	64-79	Effect 4
	80-95	Effect 5
	95-110	Effect 6
	111-125	Effect 7
	126-145	Effect 8
	146-159	Effect 9
	160-175	Effect 10
	176-190	Effect 11
	191-205	Effect 12
	206-220	Effect 13
	221-255	Effect 14
8CH Frost	0~255	0~100% Linear frost
9CH Focus	0~255	0~100% Linear focus
10CH Pan	0~255	540°
11CH Pan fine	0~255	1.8°
12CH Tilt	0~255	270°
13CH Tilt fine	0~255	1.8°
14CH Macro	0~11	
15CH Reset	128	Reset
16CH Lamp	63	Lamp off
	178	Lamp on
17CH Pan/Tilt speed	0~255	Linear adjust
18CH Gobo wheel speed	0~255	Linear adjust
19CH Focus speed	0~255	Linear adjust
20CH Gobo Speed	0~255	Linear adjust

eco stage 2R

8. CLEAR AND MAINTENANCE

Warning: Please make sure cut off the power before open the covers.

(Kind Remind: Non-Professional don't do this)

1、 Cut off the power supply, cool down the lamp and open the covers.

2、 Using vacuum or pressure blows gently blow any dust and floating structures.