ECO Stage BeamSpot 3R

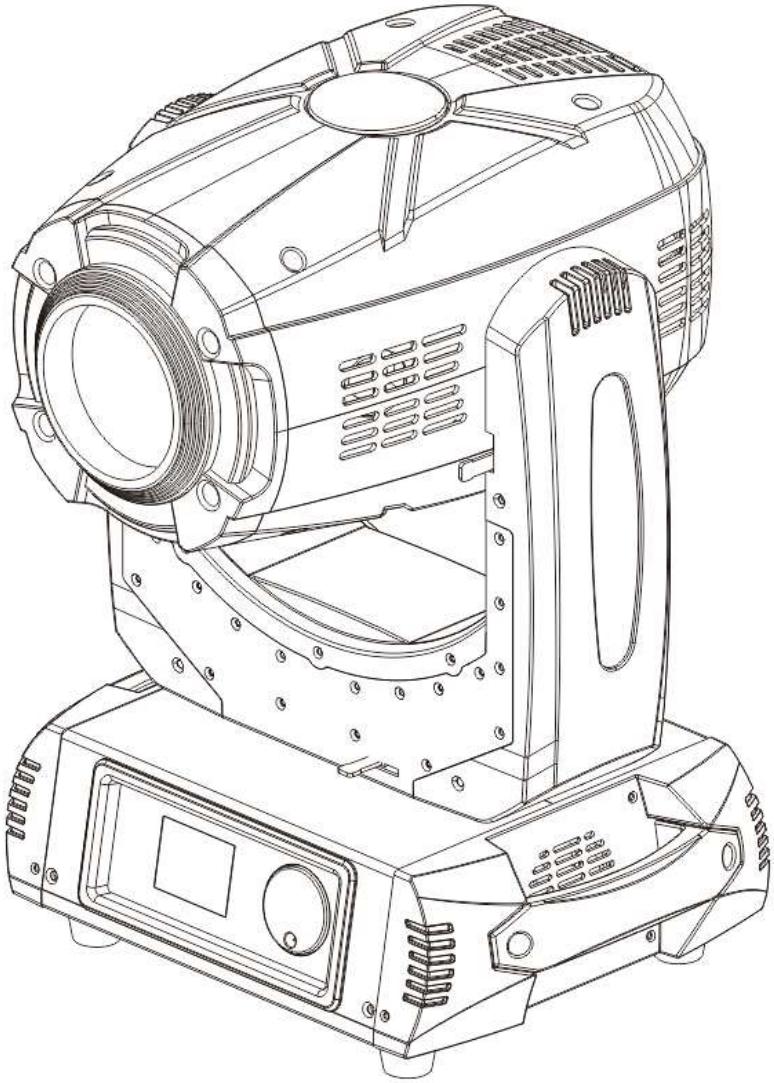

Weight ： 13KG

Power ： 150W

ITEM

Item.....02

1.Product introduce 03

2.Fixture size..... 03

3.Parts introduce..... 05

4.Safety information..... 05

5.Packing and shipping 07

6.AC power..... 07

7.Lamp model and replace..... 07

8.Control Panel..... 08

9.Control panel operate.....08

10.DMX Channels..... 13

STATEMENT

The product is good packing when ship out the factory. All users should strictly abide by the warnings and instructions stated in this manual, any damage and results due to misuse and the neglect of this operating manual will be excluded from the deal responsibility this manual will not informed in additionally if have technical changes.

PRODUCTION INTRODUCE

Thank you for choose this Mini HOT BEAM products, this model is the moving head light which is the latest development of the smart, efficient products, beautiful shape, smooth R & D, combined with the advanced technology of today's stage lighting products with international advanced electronic control technology and excellent user-friendly industrial design , fully comply with CE standard, accepted international standard DMX512 signal mode.*

This moving head lights, use ceramic luminescent film reflector as a condenser system, coupled with the high-quality optical lens components, broadband voltage, a clear pattern, sharp and uniform output light efficiency. Intelligent LCD display module, the English language selection mode, intuitive operating menu, shortcut.

Mini Hot Beam , have 16/24 international standard DMX512 channels optional Horizontal scan: 540 ° vertical scanning 270 ° (16bit precision scanning) electronic correction, dot-matrix display, four touch switch LCD + single-Key flying shuttle can spin. The can be inverted 180 °, the color wheel is combined with white and 14 colors. 2 Gobo wheels: 9 patterns + white effect round by 8 prism+ 6 prism and atomization function. 0-100% mechanical dimmer, support mechanical strobe and variable strobe effect, strobe macro function. The optical system of the lens group electric focusing, the beam angle of 0 to 4 ° with overheating protection function

Moving head lights are widely used in television, disco, dance halls, nightclubs, large-scale performances and other professional venue

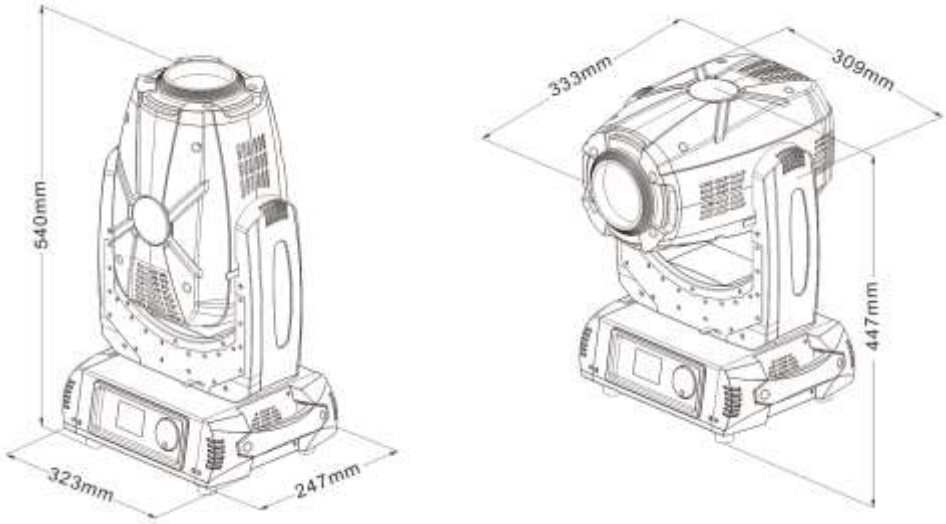

2 FIXTURE SIZE

Size：333（L）× 323（W）× 540（H)

3. Parts introduction 010 00001000001000100

01

02

01 — lens
02 — Titl lock
03 — Arm
04 — Body 04
05 — pan tilt
06 — light base
07 — handle

06

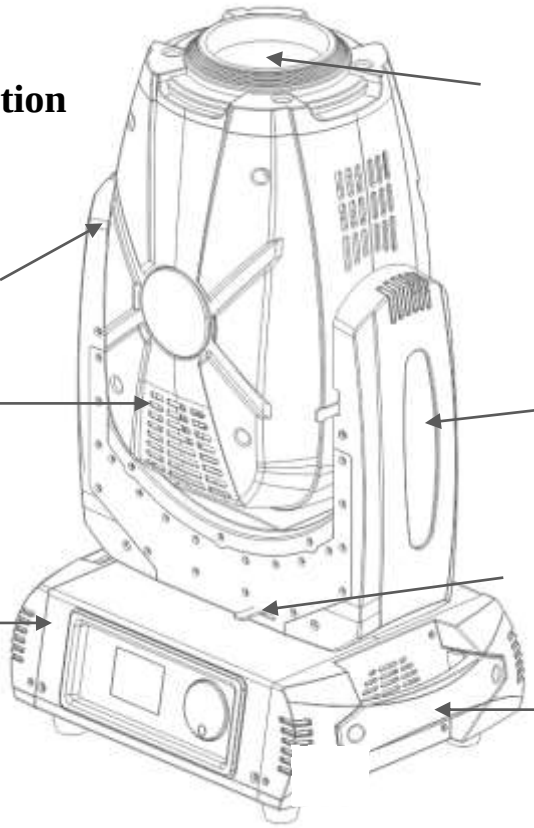

03

05

07

01 — diplay
02 — control wheel 01 02

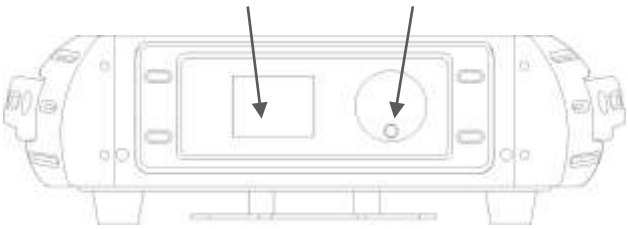

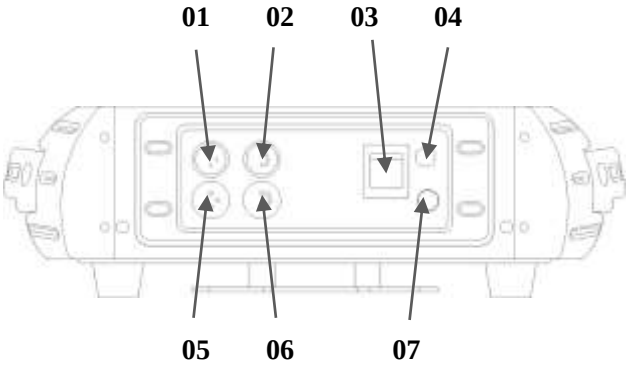

01 — 3 Pin dmx In
02 — 5 Pin dmx in
03 — Power switch
04 — Power in
05 — 3 Pin dmx out
06 — 5 pin dmx out
07 — Fuse

4. SAFETY INFORMATION

Safety warning message

This product is only suitable for professional use, and does not apply to security for other purposes. After you got the lights, please check the package whether have any damage caused by transportation. If there is any damage, do not use this fixture, and please contact the dealer or manufacturer as soon as possible.

This product is only suitable for indoor, IP20 protection class. Lamps should be kept dry to avoid Moisture, overheating or dusty environment. Prevent lamps come into contact with water or any other liquid.

The use of this product should pay attention to: fire, heat, electric shock, ultraviolet radiation, the lamp to explode or

Shedding caused serious or fatal injury.

Need to read the instructions before use energized or installing.

Follow through the operation of security methods and pay attention to the warning signs on the specification and equipment. If you have any problem for how to safely operate the equipment. Please contact your dealer

4.1 2.1 ANTI-HIGH TEMPERATURE

40°C

Please don’t use the equipment if the temperature above 40℃

4.2 BURST PREVENTION

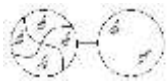

The lens should be changed if had damaged or any problems. Don't change the non-original manufacturer lens.

4.3 TO PREVENT FALLING WOUNDING

Please don't move the package by one person only.
When Hang the fixture, please must verify that the facilities to be able to withstand the weight of the lamps at least 10 times more.
Please make sure the Mounting hardware is strong enough no any damage, and insurance for the safety rope as auxiliary security fixed in other facilities will need to verify before installation. Installing or removing the equipment, to make the pulley below the work location

4.4 UA PROTECTION AND THE BULB EXPLOSION

Prohibit straight viewpoint with exposed bulbs to avoid UV damage to the eyes;
Do not use the equipment without the lens screen and the lid;

The lens and the light head covers should be timely replaced if any damage to rupture
The Fixture should be used with the protection screen together.

4.5 PREVENTION OF ELECTIC SHOCK

The electrical connection must only be carried out with corresponding qualifications;
Before installing, make sure you use the power voltage lamps must comply with the identified power, voltage and have an overload or leakage protection;
Each lamp must be properly grounded, installed in accordance with the relevant standards;
Cut off the power when stall or replace the lamp and the fuse;
Prohibit the use of a lightning storm or wet environment.

4.6 TO PREVENT BURNING OR FIRE

1. The fixture can be mounted directly on the surface of ordinary combustible material.

2. Do not short-circuit temperature protection switch or fuse, use the specified type of fuse.
3. The equipment must be installed away from inflammable and explosive materials.
4. The equipment should be projected range of 3 meters away objects and projectiles temperature less than 60 ° C; ---- 3.0m. 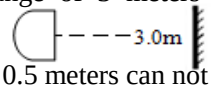

5. Fan or ventilation, at least in the range of 0.5 meters can not be an obstacle.
6. Do not place any object on the lens.

7. Handling at least allow the device to cool for 20 minutes.
8. Do not replace the non-original parts.

4.7 TRANSPORT PROTECT LOCK

In order to protect the light, there is a protect lock; During the transport , the lock will closed keeping the item in safety state.

4.8 ABOUT PACKING

1. Before packed, make sure power is off, and wait for at least 20mins for cooling down.
2. Before clean the fixture, make sure X, Y axis protect lock closed.
3. After packed by plastic bag, high-lift the fixture with two handles besides the product. put the product into the fly-case up-side-down.
4. After packed the product, put the accessory into the accessory case, then closed and lock the fly-case.
5. Fly-case only up stacked two layers. Prohibited upside down
6. When packed with carton box, equipment should be put into the foam first, then set into a carton, pay attention to the vertical position.

。

4.9 UNPACKING

Note: Before unpacking check the damage is whether due to the transportation or not, if you find any such damage, please do not use this item, and contact with the dealer or manufacturer as soon as possible.

1. Open the fly-case, and discover the inside plastic bag.
2. High-lift the product by two handles beside the bottom base and move it out.
3. Before power on, make sure you have opened the X, Y axis lock!

Attention! One product only can accept one input one output.
Mini Hot BEAM DMX cable include 3 contact pins:
Pin 1, FOR GROUND; Pin 2 connected to the negative polarity signal; The pin 3connected to the positive polarity signal.

DMX512 cable must use the professional shielded twisted pair cable; standard loudspeaker cable is not reliable to control the long-range data. 24AWG cable is suitable for more than 200 meters long-distance signal transmission and must add\ DMX 512 signal amplifier.
Do not use two outputs to separate the connection, if separate a continuous connection to branch, DMX512 splitter is necessary.

Attention! Do not overload the connection. One continuous connection can only connect up to 32 devices.

If use the DMX512 splitter. At first connect DMX512 Splitter input terminal to controller .And then connected from the splitter output terminal to next device.
Do as above guide to connect other device, and finally coupled with terminal insertion

5.PACKAGE

Mini Hotbeam packed with fly-case of two in one ,or carton box.
Attach follow accessory.

ACCESSORY

CONTENT	QUANTITY
USER MANUL	1
SIGNAL CABLE	1
Clamp (option)	2

6. AC POWER

VOLTAGE, POWER, FUSE SPECIFICATION

Input Voltage	Total Power	Frequency
110~240V	250 W	50/60HZ

Fuse voltage	Electronic current	Specification
250V	6A	5×20

6.1 POWER PROTECT

The equipment must be operated by professionals; Make sure that the voltage of power supply must be comply with the voltage identified on the lamp, and must have an overload or leakage electrical protection.

ATTENTION!

Factory has equipped the standard 3 pin plug socket. Connect the power supply as below table.
If lamp cable is damaged, replacement should be operate by factory or qualified staff. Any question, please contact professionals or talk to a qualified electrician.

Live wire(L)	Null(N)	Ground wire	
RED	BLUE	Yellow +Green	

7. LAMP

7.1 LAMP DESCRIPTION

LAMP MODEL	POWER OF LAMP	LIFE/HOUR	COLOR TEMPERATURE
YODN 3R	150 W	4000 HOURS	8500K

WARNING! There is a safety hazard or damage if install similar bulb To reduce the risk of damage to light ,do change the lamp before using time over 125% of lamp life .

LAMP REPLACE

Attention! When replace the lamp is forbidden to touch lamp with bare hand, to avoid the greasy dirt stains filament. filament must be kept clean

1. Disconnect the power. Before replace lamp, fixture need 20 minutes for lamp cooling. Fasten the head with Y axis protect lock in 60 ° position.

1. Use cross screwdriver to open the light body cover(picture)

2. After open the cover,you can see the lamp inside,please wait the lamp be cool after used but not touch it in hot status.(picture 2)

（2）

3. One hand press the lamp holder,another hand hold the lamp,and pull out the wires(picture 3,4)

（3）

（4）

4.after take apart the lamp, please check the inside glasses, clear it will make the light better effect.(Picture 5)

5.installed the lamp after replaced.

8.COLOR WHEEL, GOBO WHEEL

Fixed Gobo

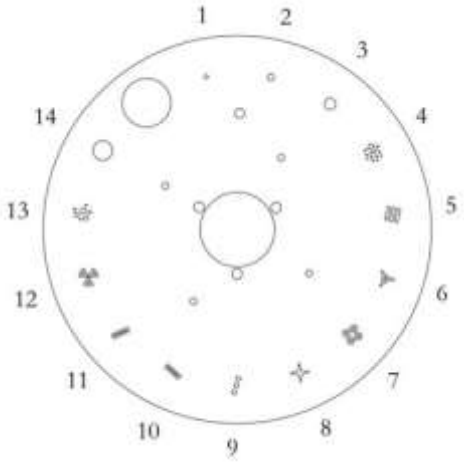

Rotation Gobo

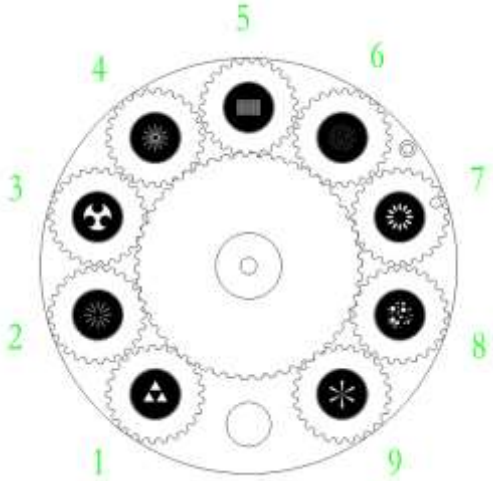

MINI HOT BEAM Have 6 linear prism and 8 facet prism.
With Focus . Rotation . Zoom . Shaking . Rotation speed changeable

8. Contorl panel

Display: to display all information of fixture.

Control wheel: can turn right,left and enter.

turn left ： date increase

turn right ： date decrease

Press function ： enter

9.CONTROL PANEL MENU OPERATE

Main Menu	Submenu 1	Submenu 2	Function SET	Function description
DMX Address			001-512	DMX Address number set
Display	"ShowReve"		"Natu"	Normal
			"Revl"	reverse 180°
	"Language"		"Chin"	Chinese 中文
			"English"	English
	"BrigSett"		000-255	Brightness set
	"Backligh"		"60S "	Backlight close after delay 60S
			"Ligh"	Backlight light always
	MenuBack"		90S	Menu back to mainmenu after dalay 90S
			"Off "	Menu back not automatic
	Backflah		open	Backlight blinking when no dmx
			off	Backlight not blinking when no dmx
	"Return "		▲	return

"Feature "	"XY Setup"	"Xreverse"	"Off "	PAN SCAN Normal
			"Open"	Pan Scan Reverse
		"Yreverse"	"Off "	Tilt Scan normal
			"Open"	Tilt Scan Reverse
		"XY Speed"	"Fast"	PAN/TILT FAST

				SPEED
			"NORM"	PAN/TILT NORMAL
			"Solw"	PAN/TILT SLOW
		"X Angle"	"360 ", "360 "	Pan Angle 360°
			"540 ", "540 "	Pan Angel 540°
			"630 ", "630 "	Pan Angel 630°
		"XY Fback"	"Off "	PAN/TILT optical sensor testing off
			"Open"	PAN/TILT optical sensor testing on
		Return	▲	Return
	"Shortcut"		"Off "	Shortcust off for colors and gobos
			"Open"	Shortcust open for colors and gobos
	"FullColr"		"Off "	half color function
			"Open"	full color function
	"ChanMode"		"Smal"	Simplify mode
			"Stan"	Standard mode
	"ReceMode"		"DMX "	Accept DMX
			"Wire"	Accept Wireless
			"Auto"	AutoRun
	"RunMode "		"Slve"	Accept other signal control
			"Musc"	Sound active
			"Auto"	Inside program Run automatically
	"SigClear"		"Off "	keep signal data
			"Open"	clear signal data
	DMX Reset		Off	Dmx reset not accept
			Open	Dmx reset accept
	Return		▲	Return
"LampSett"	"Default "		"Wink"	Lamp off
			"Ilum"	Lamp on
	"Control "		"Wink"	Lamp off by manual
			"Ilum"	lamp on by manual
	"DmxLamp "		"Off "	Close other signal control the lamp
			"Open"	Open other signal control the lamp
			0000-9999	Lamp used time recorded

	"LampTime"			
	"ClearTim"		★	Password input Enter
			"Ilum"	Clear Lamp time
	"LampStat"		"Wink"	Lamp off
			"Ilum"	Lamp on
	Return		▲	Return
"InfoSee "	"WorkHour "		0000-9999	working hours memo for connect power
	"Times "		0000-9999	Open times memo
	"Fan1Rota"		0000-9999	Fan rotation speed 1
	"Fan2Rota"		0000-9999	Fan rotation speed 2
	"Version "		XMOA	Version
	Spare time		No limit	No limit time
	Spare cut		No limit	No limit times
	Return		▲	Return
"Control "			Chan 00-Chan 40	Control the Channels
"AssiTool"	**"Factory "**		★	Password input Enter
			"Fold"	Recover Factory set
			"Save"	Save factory set
	"Defaults"		★	Password input Enter
			"Fold"	Recover to default
	Redress		★	Password input enter
			Reset01-10	Set the motors
	Chdefine		Color wheel Rotation 001	Channels set by define
			000……040	Channels set by define
	"Brightne"		★	Password input Enter
		"TimeLimi"	0000-9999	Open fixture time limit
		"TimsLimi"	0000-9999	fixture times limit
		TimeCLEA	clear	Clear the time of used
		CutClea	clear	Clear the times of used
		"Passwor1"	000-255	Revise password 1
		"Passwor2"	000-255	Revise password 2
		"Passwor3"	000-255	Revise password 3
		"Passwor4"	000-255	Revise password 4
		"X Drivin"	000-255	pan main drive gear
		"X Driven"	000-255	Pan slave drive gear

		"Y Drivin"	000-255	Tilt main drive gear
		"Y Driven"	000-255	Tilt slave drive gear
		"LampPowe"	"Off "	Ballast earthed
			"total 5V", "Open"	Ballast 5V
		"YAngle "	000-255	Tilt angel rotation set
		"Return "	000-255	return
	"Checksum "	01-10"		Check Cabrilate data
	Return		▲	Return
CHANLEVE			Chan1..140	Show the dmx address
MotorRst			Color...focus	Display the status
	Return		▲	
All Reset"			"Annu"	Cancel
			"Exec"	Reset

XY Rst	PAN/tilt RESET		"Annu"	Cancel
			"Exec"	Reset
EffecRst	Effect reset		"Annu"	Cancel
			"Exec"	Reset
"ExitMenu"			▲	Exit

10.DMX Channels

MODE 1	MODE 2	DMX Value	Description
1	1	0－255	Pan
2	*	0－255	Pan Fine
3	2	0－255	Tilt
4	*	0－255	Tilt Fine
5	3	0－255	Pan/Tilt speed
6	4		Micro
		0－19	Empty
		20－24	Energy-saving mode（230W）
		25－129	Empty
		130－139	Lamp on by dmx

		140－149	PAN/TILT reset
		150－159	Empty
		160－169	Small motors reset
		170－199	empty
		200－209	Whole unit reset
		210－229	empty
		230－239	Lamp off by dmx
		240－255	empty
7	5		Colors
		0－8	White
		9－17	Deep Red
		18－26	Deep Blue
		27－35	Yellow
		36－44	green
		45－53	Magenta
		54－62	Light blue
		63－71	red
		72－80	Deep green
		81－89	Amber
		90－98	blue
		99－107	orange
		108－116	CTO
		117－127	blue
		128－129	white
		130－134	blue+CTO
		135－138	CTO+orange
		139－143	Orange+blue
		144－147	blue+amber
		148－152	Amber+deep green
		153－157	Deep green+red
		158－161	Red+light blue
		162－166	Light blue+magenta
		167－171	magenta+green
		172－176	Green+yellow
		177－180	Yellow+deep blue
		181－185	Deep blue+deep red
		186－189	Deep red+white
		190－220	Run from fast to slow
		221－250	Run from slow to fast
		251－255	white
8	*		empty
9	6		empty

	7		Static gobo
10		0－3	empty
		4－9	Gobo 1
		10－15	Gobo 2
		16－21	Gobo 3
		22－27	Gobo 4
		28－33	Gobo 5
		34－39	Gobo 6
		40－45	Gobo 7
		46－51	Gobo 8
		52－57	Gobo 9
		58－63	Gobo 10
		64－69	Small beam 1
		70－75	Small beam 2
		76－87	Small beam 3
			Gobo shaking from slow to fast
		88－95	shaking
		96－103	Gobo 2
		104－111	Gobo 3
		112－119	Gobo 4
		120－127	Gobo 5
		128－135	Gobo 6
		136－143	Gobo 7
		144－151	Gobo 8
		152－159	Gobo 9
		160－167	Gobo 10
		168－175	Small beam 1
		176－183	Small beam 2
		184－199	Small beam 3
		200－255	Static gobo run from slow to fast
11	8		Rotate gobo
		0－8	empty
		9－17	Gobo 1
		18－26	Gobo 2
		27－35	Gobo 3
		36－44	Gobo 4
		45－53	Gobo 5
		54－62	Gobo 6
		63－71	Gobo 7
		72－80	Gobo 8
		81－89	Gobo 9

			Gobo shaking from slow to fast
		90－97	Shaking ,from slow to fast
		98－106	Gobo 2
		107－115	Gobo 3
		116－124	Gobo 4
		125－133	Gobo 5
		134－142	Gobo 6
		143－151	Gobo 7
		152－160	Gobo 8
		161－169	Gobo 9
		171－179	Gobo 9 not move
		180－217	Run from fast to slow
		218－255	Run from slow to fast
12	9		Gobo rotation
		0－127	index
		128－177	Run from slow to fast in anti clockwise
		178－203	stop
		204－255	Run from fast to slow in clockwise
13	*	0－255	empty
14	10		prism
		0－19	empty
		20－75	6 linear prism
		76－255	8 facet prism
15	11		Prism rotation
		0－127	index
		128－191	Run from fast to slow in clockwise
		192－194	empty
		195－255	Run from slow to fast in anti clockwise

16	12		Frost
		0－64	empty
		65－255	linear frost
17	13		zoom
		0－255	Linear zoom
18	*	0－255	Zoom fine
19	14	0－255	focus

20	*	0－255	Zoom fine
21	*	0－255	empty
22	15		strobe
		0－31	Strobe close
		32－63	No Strobe
		64－95	Strobe from slow to fast
		96－127	No Strobe
		128－143	Fast to slow,slow close fast open
		144－159	Slow to fast,fast open slow close
		160－191	Strobe open
		192－223	Random strobe from slow to fast
		224－255	No strobe
23	16		dimmer
		0－255	Linear dimmer
24	*		empty

REMARK : WITH 2 CH MODELS