260 Beam Moving head light

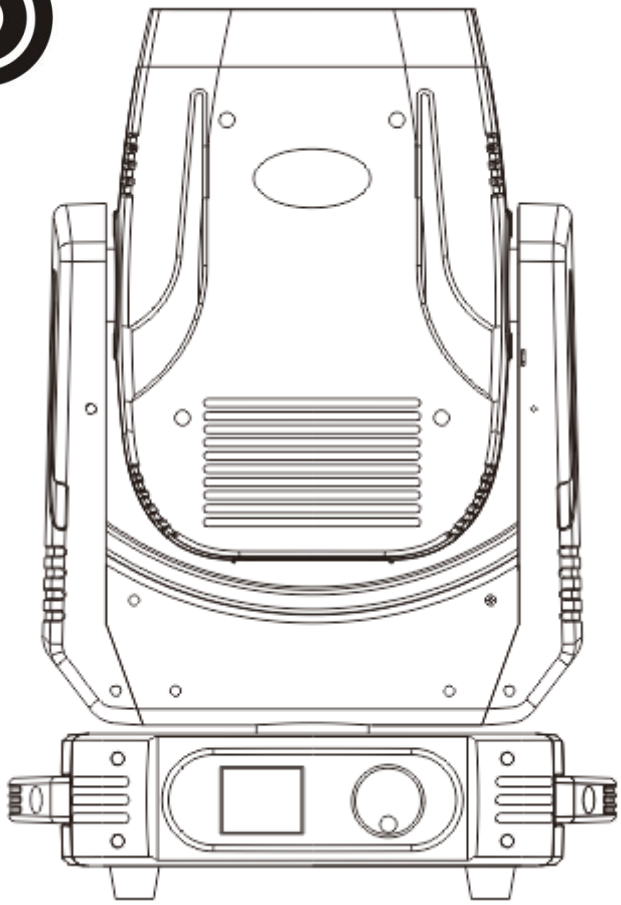

WEIGHT：16.4KG

COLOR TEMPERATURE：8400 K

ITEM

Item.....02

1.Product introduce 03

2.Fixture size.....03

3.Parts introduce..... 04

4.Safety information.....05

5.Packing and shipping 06

6. Installation standards 07

7.AC power..... 08

8. Lamp model and replace….....08

9.Control panel operate.....10

10.DMX Channels.....11

11.Routine maintenance.....14

12.Simple troubleshooting.....14

STATEMENT

The product is good packing when ship out the factory. All users should strictly abide by the warnings and instructions stated in this manual, any damage and results due to misuse and the neglect of this operating manual will be excluded from the deal responsibility this manual will not informed in additionally if have technical changes.

1. PRODUCTION INTRODUCE

Thank you for choosing this NEX260 products, this model is the moving head light which is the latest development of the smart, efficient products, beautiful shape, smooth R &

D, combined with the advanced technology of today's stage lighting products with international advanced electronic control technology and excellent user-friendly industrial design , fully comply with CE standard, accepted international standard DMX512 signal mode.

260 Beam use efficient lamp and short distance condenser system, coupled with the high-quality optical lens components, Gorgeous color and clear gobos, sharp and uniform output light. Chinese/English language selected.

Operate menu intuitive and fast; The display can be inverted 180 °. DMX512 channels optional . Horizontal scan: 540 ° vertical scanning 270 °.

Production enforce standard GB7000.1-2015,GB7000.217-2008 and GB17625.1-2012.

Channels mode :16CH
lamp：BORYLI MSD R9 lamp 260 /YODN MSD 260 R9
Lamp Color Temperature：8400K
Lamp lifespan：2000hours
Power: 110-240V,50/60Hz;PF≥0.95
Total power:380W
Display: 1.7 inch Screen display；
Color:14colors+white
Fixed gobo: 14gobo+white
Prism:16 facet prism+3 layer prism .Two prism can overlay:
Colorful prism effects.
Beam angel:4°;
Pan: 540°,8/16Bit; Tilt: 270°,8/16Bit;
IP Rate: IP20;Product size: 367.6x267x539.8mm;
Carton box：585*465*425mm
N.W：16.44Kg

2 FIXTURE SIZE 367.6(L)x267(W)x539.8(H)mm

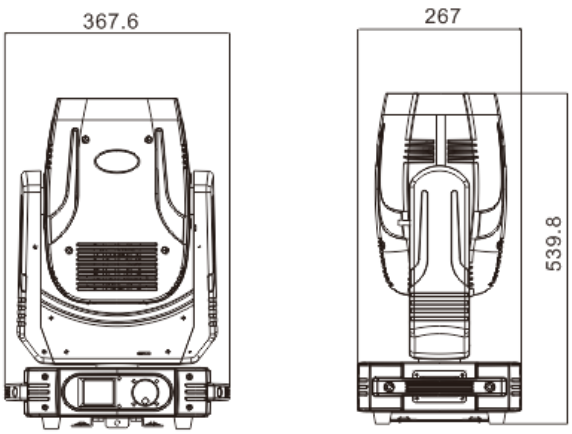

3.PARTS INTRODUCE

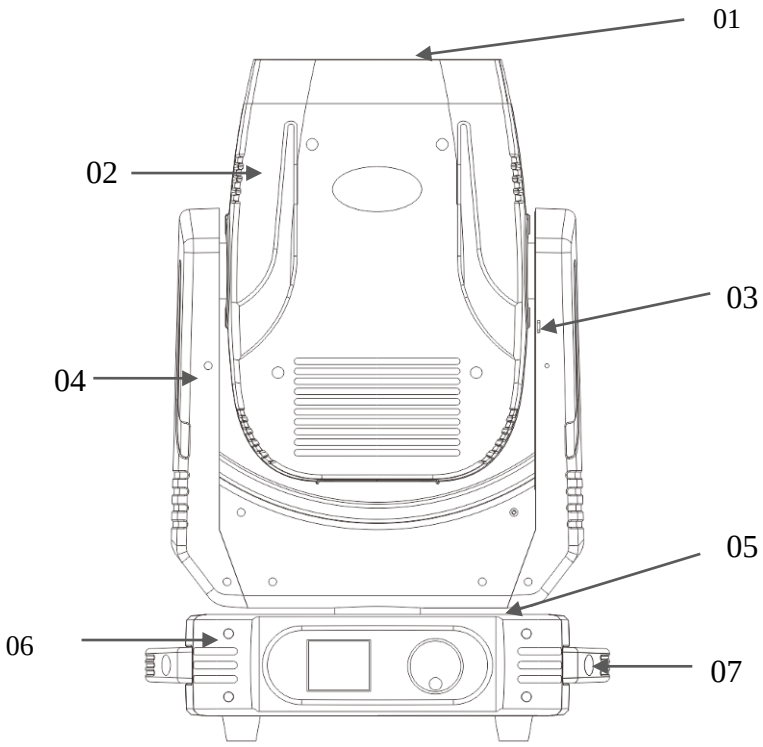

01 — Lens
02 — Body
03 — Arm
04 — Tilt Lock
05 — Pan Lock
06 — Ligh base
07 — Handle

NEX260 each part of product structure and main composition product name description for better know the light unit.

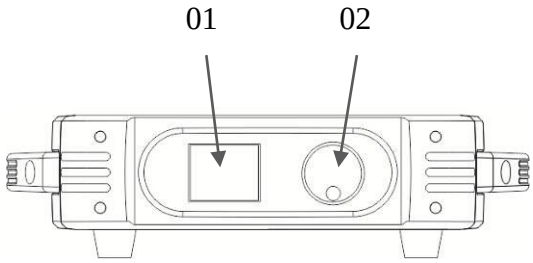

01 —LCD display
02 —Control whell

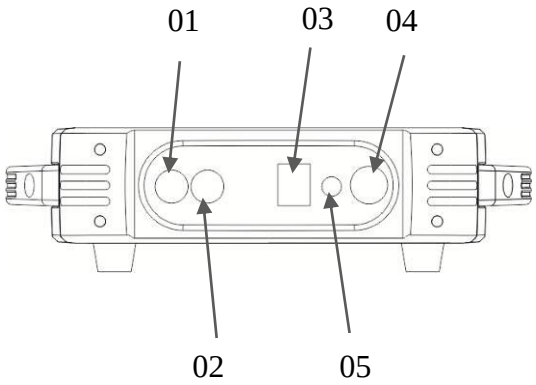

01 — DMX In
02 — DMX Out
03 — Power Switch
04 — Power In
05 — Fuse

4. SAFETY INFORMATION

4.1.1 SAFETY WARNING MESSAGE

This product is only suitable for professional use, and does not apply to security for other purposes. After you got the lights, please check the package whether have any damage caused by transportation. If there is any damage, do not use this fixture, and please contact the dealer or manufacturer as soon as possible.

This product is only suitable for indoor, IP20 protection class. Lamps should be kept dry to avoid Moisture, overheating or dusty environment. Prevent lamps come into contact with water or any other liquid.The use of this product should pay attention to: fire, heat, electric shock, ultraviolet radiation, the lamp to explode or

Shedding caused serious or fatal injury.

4.1.2 NEED TO READ THE INSTRUCTIONS BEFORE USE ENERGIZED OR INSTALLING

Follow through the operation of security methods and pay attention to the warning signs on the specification and equipment. If you have any problem for how to safely operate the equipment. Please contact your dealer.

4.1.3 LAMP

The fitting mounts a high-pressure lamp that needs an external. Immediately replace the lamp if damaged or deformed by heat .The light source in this fixture shall be replaced by the manufacturer or its service agent or similar qualifcation. Always disconnect from mains before replacing the lamp.

4.1.4 OPERATION IS PROHIBITED

In automatic mode do not manually force the equipment or light

4.1.5 POINTING IS PROHIBITED

Never point the lights directly to the sun or other strong light source.

4.2 TO PREVENT FALLING WOUNDING

Please don’t move the package by one person only.

When Hang the fixture, please must verify that the facilities to be able to withstand the weight of the lamps at least 10 times more.

Please make sure the Mounting hardware is strong enough no any damage, and insurance for the safety rope as auxiliary security fixed in other facilities will need to verify before installation. Installing or removing the equipment, to make the pulley below the work location.

4.3 UA PROTECTION AND THE BULB EXPLOSION

Prohibit straight viewpoint with exposed bulbs to avoid UV damage to the eyes;
Do not use the equipment without the lens screen and the lid;
The lens and the light head covers should be timely replaced if any damage to rupture
The Fixture should be used with the protection screen together.

4.4.1 ANTI-HIGH TEMPERATURE (Rated maximum ambient temperature)

ta =40°C

Please don't use the equipment if the temperature above 40℃

4.4.2 ANTI-HIGH TEMPERATURE （Maximum outer surface temperature）

4.5 IP PROTECTION

The product are certified at IP 20 levels only. Adequate additional protection should be taken for outdoor use. All lamps, lights and their fittings should be kept dry. Overheating dust and excessive humidity must be avoided.

4.6 BURST PREVENTION

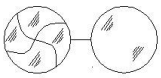

The lens should be changed if had damaged or any problems. Don't change the non-original manufacturer lens
Len size： ⌀145*24mm

4.7 PREVENTION OF ELECTIC SHOCK

The electrical connection must only be carried out with corresponding qualifications;
Before installing, make sure you use the power voltage lamps must comply with the identified power, voltage and have an overload or leakage protection;
Each lamp must be properly grounded, installed in accordance with the relevant standards;
Cut off the power when stall or replace the lamp and the fuse;
Prohibit the use of a lightning storm or wet environment.

4.8 MAINTENANCE

Before starting any maintenance work or cleaning the projector,cut off power from the mains supply. After switching off,do not remove any parts of the fitting,to avoid getting burnt for at least 30 minutes.After this time the likelihood of the lamp exploding is virtually nill.
The fitting is designed to hold in any splinters produced by a lamp exploding. The lenses must be mounted and,if visibly Damaged, they have to be replaced with genuine spares.

4.9 TO PREVENT BURNING OR FIRE

1. The fixture can be mounted directly on the surface of ordinary combustible material.
2. Do not short-circuit temperature protection switch or fuse, use the specified type of fuse.
3. The equipment must be installed away from inflammable and explosive materials.
4. The equipment should be projected range of 10 meters away objects and projectiles temperature less than 60 ° C 10m
5. Fan or ventilation, at least in the range of 0.5 meters can not be an obstacle.
6. Do not place any object on the lens.
7. Handling at least allow the device to cool for 20 minutes.
8. Do not replace the non-original parts.

5. PACKING AND SHIPPING

5.1 ACCESSORIES PROJECT

.NEX260 packed with fly-case of two in one ,or carton box. Attach follow accessory.

ACCESSORY

CONTENT	QUANTITY
USER MANUL	1
SAFETY ROPE	1
HANG FIXTURE	2
SIGNAL CABLE	1

5.2 TRANSPORT PROTECT LOCK

In order to protect the light, there is a protect lock; During the transport , the lock catch position need lock in the center, and the fixture keep in vertical state.

5.3 ABOUT PACKING

1. Before packed, make sure power is off, and wait for at least 20mins for cooling down.
2. Before clean the fixture, make sure X, Y axis protect lock closed.
3. After packed by plastic bag, high-lift the fixture with two handles besides the product. put the product into the fly-case up-side-down.
4. After packed the product, put the accessory into the accessory case, then closed and lock the fly-case.
5. Fly-case only up stacked two layers. Prohibited upside down
6. When packed with carton box, equipment should be put into the foam first, then set into a carton, pay attention to the vertical position.

5.4 UNPACKING

Note: Before unpacking check the damage is whether due to the transportation or not, if you find any such damage, please do not use this item, and contact with the dealer or manufacturer as soon as possible.1. Open the fly-case, and discover the inside plastic bag.2. High-lift the product by two handles beside the bottom base and move it out.3. Before power on, make sure you have opened the X, Y axis lock!

6. INSTALLATION STANDARDS

Must use two clamps fix the fixture, and tighten the clamps with1/4 lock, only fully clockwise rotate 90 °then can lock the fasteners. Add one safety insurance rope on the hole of light base. pls attention not connect to the transport handle. Attention! One product only can accept one input one output.DMX512 cable must use the professional shielded twisted pair cable; standard loudspeaker cable is not reliable to control the long-range data. 24AWG cable is suitable for more than 300 meters long-distance signal transmission and must add\ DMX 512 signal amplifier.

Do not use two outputs to separate the connection, if separate a continuous connection to branch, DMX512 splitter is necessary.

If use the DMX512 splitter. At first connect DMX512 Splitter input terminal to controller .And then connected from the splitter output terminal to next device.

Do as above guide to connect other device, and finally coupled with terminal insertion

6.1 Equipment fixation

1. Before installation, it is necessary to verify that the gear clamp is not damaged and can bear at least 10 times the weight of the equipment. The verification building can bear the weight of at least 10 times the total weight of the equipment and fixture cable attached equipment.
2. The fixture is mounted on the base of the lamp body, inserts the fastener into the mounting hole of the base, and holds the handle of the fastener to lock the 1/4 ring clockwise, and the other fasteners are installed in the same way.
3. Install a safety rope that can withstand 10 times the weight of the equipment.
4、Check whether the vertical lock has been opened. There is no combustible or attached in the verification equipment within 3 meters. Near other flammable objects.

Notice！

It is necessary to use 2 fixtures to fix the equipment and fasten the fixture with the 1/4 button. A clockwise rotation of 90 degrees can be used to lock the fastener. Add 1 safety ropes to the base hole. Be careful not to connect to the handle.

6.2 Device connection

lWarning！ The signal of a device can not connect two inputs and two outputs.

1) 3 core plug-in connector with DMX input and output. Socket 1 pins are grounded, 2 pins connect negative polarity signals, and 3 pins connect positive signals.

2) use shielded twisted pair cables specially designed for DMX 512 devices; standard amplifiers can not reliably control long distance data. 24AWG cable is suitable for use for more than 300 meters. When long distance signal transmission, DMX 512 signal amplifier must be added.

3) do not use two outputs to separate connections. If you want to separate the continuous connection components, you must use the DMX512 divider to separate them. If the DMX512 allocator is used, the controller is connected to the input of the DMX512 distributor first, then the next device is connected from the output end of the distributor, and the terminal plug is finally fitted according to the above method.

7. AC POWER

VOLTAGE, POWER, FUSE SPECIFICATION

Input Voltage	Total Power	Frequency
110-240V	430W	50/60HZ

Fuse voltage	Electronic current	Specification
250V	6A	5×20

B350 Power connection attention:

Attention! The equipment must be operated by professionals; Make sure that the voltage of power supply must be comply with the voltage identified on the lamp, and must have an overload or leakage electrical protection.

Live wire(L)	Null(N)	Ground wire	
BROWN	BLUE	Yellow +Green	⏚

8.1 LAMP MODEL AND REPLACE

B350 LAMP

LAMP MODEL	POWER	LIFE/HOUR	LUMEN
BORYLI MSD 260 R9	260w	2000HOURS	8400K
YODN MSD 260 R9	260w	2000HOURS	8400K

WARNING! There is a safety hazard or damage if install similar bulb To reduce the risk of damage to light ,do change the lamp before using time over 90% of lamp life .

8.2 LAMP REPLACE

Attention! When replace the lamp is forbidden to touch lamp with bare hand, to avoid the greasy dirt stains filament. filament must be kept clean. Disconnect the power. Before replace lamp, fixture need 20 minutes for lamp cooling. Fasten the head with Y axis protect lock in 60 ° position.

1.When the power is cut off, it will take 20 minutes to cool the lamp and lock the Y axis lock at 60 degrees.. (picture 1)

(picture 1)

2.Remove four screws（picture 2）,open the light body cover,take the fan bracket and pull out the connection line of the bulb.（picture 3）.

(picture 2)

(picture 3)

3.Unscrew the two screws of the stainless steel plate support.(picture 4 ）,open the stainless steel sheet support with one hand to the right.（picture 5）.

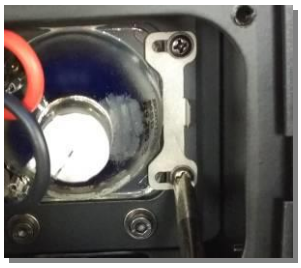

(picture 4)

(picture 5)

4、The other hand pulled the bulb from the stainless steel tab 15 degrees.（picture 6）,Pull out the power line of the bulb.（picture 7）.

(picture 6)

(picture 7)

5..Install the lamp after replaced.

9. CONTROL PANEL

9.1 Introduction of control panel

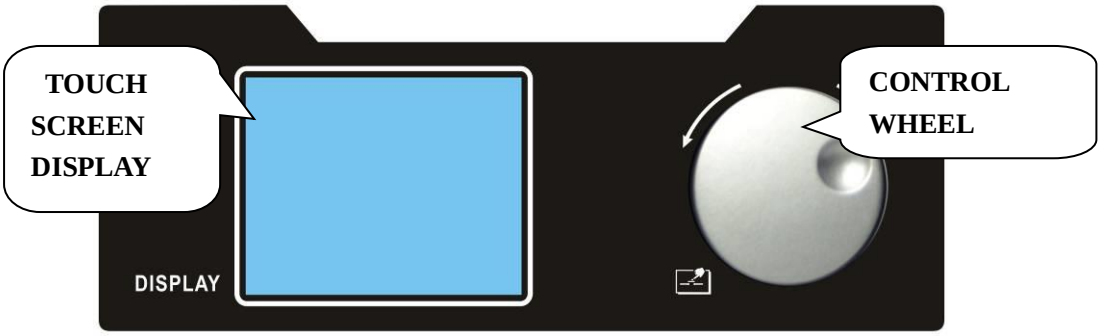

Touch screen display：Display the data information and control operation;

Control wheel: can turn right,left and enter;

Turn left: Data increasing, scroll menu;

Turn right: Data diminishing, scroll menu;

Enter: OK

9.2 CONTROL PANEL MENU OPERATE

Main Menu	Submenu	Function SET	Function description
ESC			
DMX address	address		001-512
FEATURES ETTING	Esc		
	Channel Mode	STANDARD/EXTEND/SIMPLE	
	Run Mode		
DefConfig	Esc		
	X back	NO/YES	
	Y back	NO/YES	
	X Y OPTICAL COUPLE MODE	NO/YES	
	Lamp control	OFF/ON	
	POWER ON	OFF/ON	
	Half color	NO/YES	
Display settings	Esc		
	CH16		001-255
TEST RUN	Esc		
	SOUND		
	Auto		
Restore factory mode	Esc		
	confirm		
fixture reset	Esc		
	confirm		

10.DMX Channels

16 CH	DMX	DMX
	0-4	open
	5-8	open + red
	9-12	Red

1CH Color wheel	13-17	Red + orange
	18-21	orange
	22-25	Orange + l. blue
	26-29	l. Blue
	30-34	l. Blue + green
	35-38	Green
	39-42	Green +magenta
	43-46	magenta
	47-51	Magenta + CTB
	52-55	CTB
	56-59	CTB + yellow
	60-63	yellow
	64-68	yellow + Golden amber
	69-72	Golden amber
	73-76	Golden amber + Pink
	77-81	Pink
	82-85	Pink + Blue
	86-89	Blue
	90-93	Blue + CTO
	94-98	CTO
	99-102	CTO + Half CTB
	103-106	Half CTB
	107-110	Half CTB + Half CTO
	111-115	Half CTO
	116-119	Half CTO + UV
	120-123	UV
	124-127	UV+ Open
	128-191	Rot >>
	192-255	Rot <<
2CH Strobe	0－3	strobe off
	4－103	strobe slow-fast
	104－107	Strobe open
	108-207	Pulse strobe ,speed up
	208-212	Strobe open
	213-251	Pulse strobe ,speed up
	252－255	Strobe open
3CH Linear dim	0-255	Linear dim
4CH Fixed gobo	0-3	-
	4-7	Gobo 1
	8-11	Gobo 2
	12-15	Gobo 3
	16-19	Gobo 4
	20-23	Gobo 5

	24-27	Gobo 6
	28-31	Gobo 7
	32-35	Gobo 8
	36-39	Gobo 9
	40-43	Gobo 10
	44-47	Gobo 11
	48-51	Gobo 12
	52-55	Gobo 13
	56-71	Effect gobo slow -fast
	72-113	Gobo clockwise fast -slow
	114-117	White
	118-159	Gobo anti-clockwise slow-fast
	160-166	Gobo 1 slow-fast move
	167-172	Gobo 2 slow-fast move
	173-179	Gobo 3 slow-fast move
	180-185	Gobo 4 slow-fast move
	186-191	Gobo 5 slow-fast move
	192-198	Gobo 6 slow-fast move
	199-204	Gobo 7 slow-fast move
	205-211	Gobo 8 slow-fast move
	212-217	Gobo 9 slow-fast move
	218-223	Gobo 10 slow-fast move
	224-230	Gobo 11 slow-fast move
	231-236	Gobo 12 slow-fast move
	237-243	Gobo 13 slow-fast move
	244-255	Effect gobo slow -fast move
5CH Prism	0-127	-
	128-170	prism 1
	171-213	prism 2
	214-255	Prism 2
6CH Prism Rotation	0	-
	1-127	Index
	128-190	Anti-clockwise fast-slow
	191-192	Stop
	193-255	clockwise slow-fast
7CH	0-7	-
	8-15	combination effect 1
	16-31	combination effect 2
	32-47	combination effect 3
	48-63	combination effect 4
	64-79	combination effect 5
	80-95	combination effect 6
	96-111	combination effect 7

	112-127	combination effect 8
	128-143	combination effect 9
	144-159	combination effect 10
	160-175	combination effect 11
	176-191	combination effect 12
	192-207	combination effect 13
	208-223	combination effect 14
8CH Frost	0	-
	1-249	Linear Frost
	250-255	Colorful Prism
9CH Focus	0-255	Linear focus
10CH	0-255	X
11CH	0-255	X fine
12CH	0-255	Y
13CH	0-255	Y fine
14CH	0-11	X Y speed adjust
15CH Reset	0-25	-
	26-76	effect reset
	77-127	XY reset
	128-255	fixture reset
	0-25	-
16CH Lamp	26-100	Lamp off
	101-255	Lamp on

11. Routine maintenance

Cleaning and maintenance

Warning: turn off the power before opening any cover.

1. After the power supply is broken, the bottom is cooled and the lid is opened.

2. Dust or floats can be blown gently with a vacuum cleaner or a pressure blow machine.

12.Simple troubleshooting

1.The whole device reacts... 1) first check whether the power fuse is normal, 2) check whether the output of switching power supply is normal, and the normal output of switching power supply is 27V.

2.If the light bulb is not bright... 1. First, test whether the light bulb has broken down, 2) the heat dissipation of the bulb is normal, whether the vent is blocked, 3) the temperature control switch is not working properly. 4) whether the PFC380 output is normal.

3.XY axis positioning point running... There is an occasional phenomenon in the use of the computer head shaking lamp. In the OPTO optocoupler mode of the menu, set up OFF confirmation, then reset the whole machine and save the optocoupler function.

4.If a one - way function is not normal... First, find the driving plug of the circuit board of this road, and change the two adjacent drive motor plugs to check out the problem of the board or the wiring or the motor.

5.If a function is jitter: the motor plug position is found on the drive board, the general motor has 4 lines and 2 groups, the universal meter measure each group of resistance values, or the lack of phase, or bad contact.

6.If a few road function work is not normal... In general, a chip controls several drives at the same time, so it is possible that the chip is abnormal.