470W BEAM SPOT WASH(CMY)

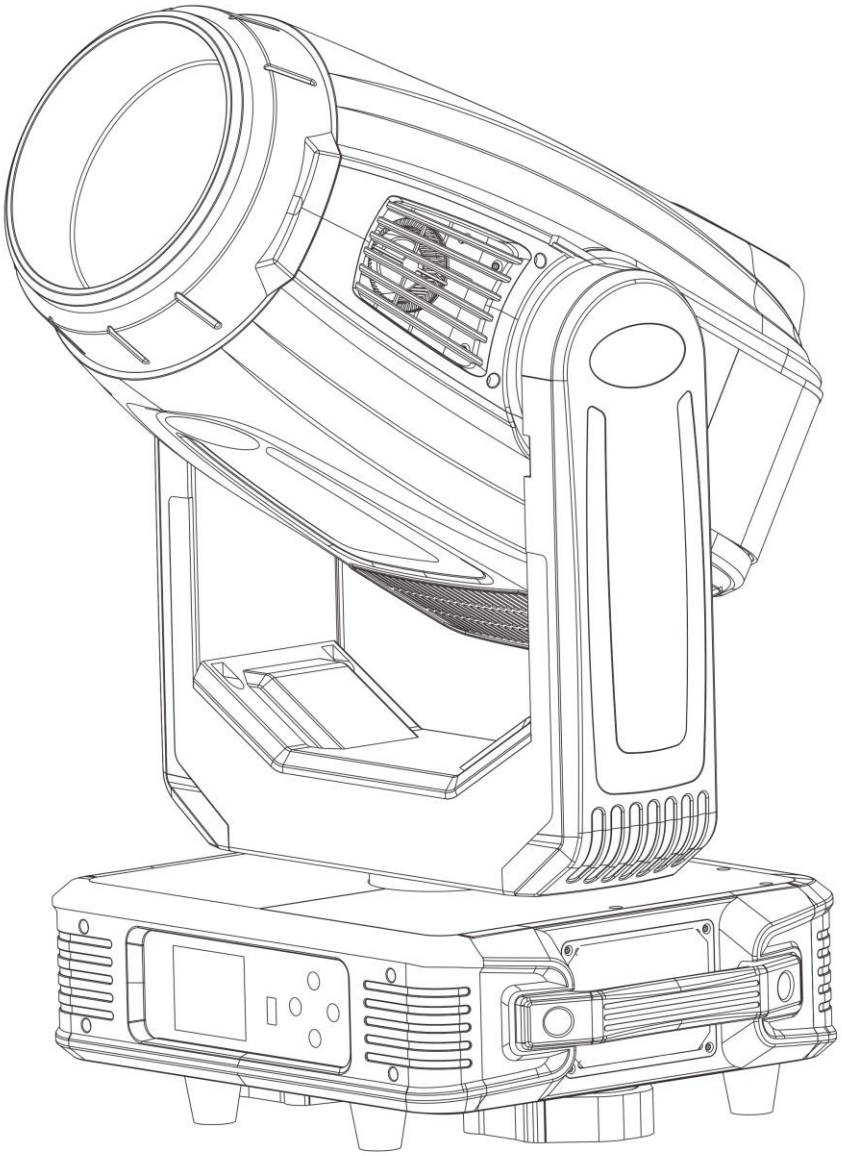

WEIGHT：24.5 KG

POWER：600W

BEAM+SPOT+WASH

דנאור מערכות תאטרון ואולפנים בע"מ | 09-7444222 | sales@danor.com | www.danor.com | רח' הנגר 9, הוד השרון

ITEM

Item.....02

1.Production introduce.....02

2.Fixture size.....03

3.Parts introduce..... 04

4. Color and gobo description.....05

5.Safety information.....06

6.Packing and shipping 07

7.Installation standard.....08

8.AC power..... 09

9.Lamp model and replace..... 09

10.Control panel 11

11.Control panel menu perate.....11

12.DMX Channels.....16

13.Routine maintenance.....22

14.Simple troubleshooting.....22

STATEMENT

The product is good packing when ship out the factory. All users should strictly abide by the warnings and instructions stated in this manual, any damage and results due to misuse and the neglect of this operating manual will be excluded from the deal responsibility this manual will not informed in additionally if have technical changes.

PRODUCTION INTRODUCE

Thank you for choosing this product. This is our latest development of intelligent, efficient products, beautiful and fluent, combined with the advanced technology of the stage lighting today. It has advanced international electronic control technology and excellent human nature chemical industry. The product is fully in conformity with the CE standard and the recipient country. The

דנאור מערכות תאטרון ואולפנים בע"מ | 09-7444222 | sales@danor.com | www.danor.com | רח' הנגר 9, הוד השרון

standard DMX512 signal mode is supported by the RDM protocol.
Production enforce standard IEC 60598-1:2014，IEC60598-2-17:2017.
Channels mode : 34/39CH;
Lamp: OSRAM SIRIUS HRI 470W XL;
Power: 110-240V,50/60Hz;
Total power: 600W;
Display: 2.8 inch screen display, can reverse 180°;
Color Wheel: 11 Colors+2700k +3200k+white+CMY
Color glass: imported Italian ODL color chip, special high temperature resistant raw material, and bright color.
Color Mixing System!
Fixed gobo : 14 gobo + white.
Rotation gobo: 9 gobo+ white,changeable;
Animation Gobo:could Used By Separately Or combined With Gobos
Rotation Prism Wheel 1:8 Facet Prism+linear 6
Facet Prism+cylindrical Prism
Rotation Prism Wheel 2:8 Facet Prism+linear 6
Facet Prism+double Layer Prism
Prism Wheel 1 And Prism Wheel 2 Can Overlay
Frost:separately Frost
Beam angel : 2.5～45°;
USB connector can set dmx address with power and upgrade the software. (RDM function)
Dimmer : 0-100% l inear adjustment ;
Pan : 540°; 8Bit/16Bit; / Ti lt : 270°; 8Bit/16Bit ;
IP Rate: IP20;
Product size: 405x245x685 mm;
Flycaes: 930x520x910 mm / Carton box: 540x450x650 mm;/N.W: 24.5 KG / G.W: 28 KG(carton).

1. FIXTURE SIZE

Size：405（L）×245（W）× 685（H）mm

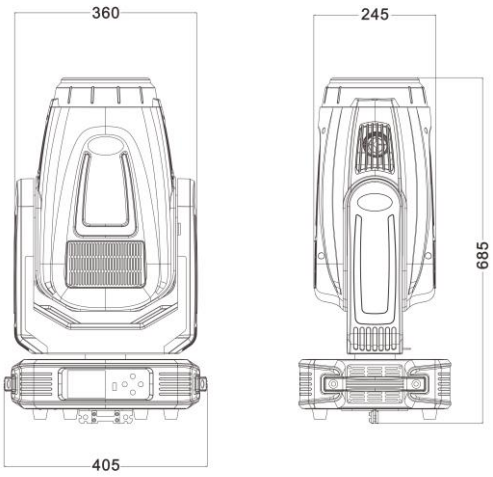

דנאור מערכות תאטרון ואולפנים בע"מ | 09-7444222 | sales@danor.com | www.danor.com | רח' הנגר 9, הוד השרון

2. PARTS INTRODUCE

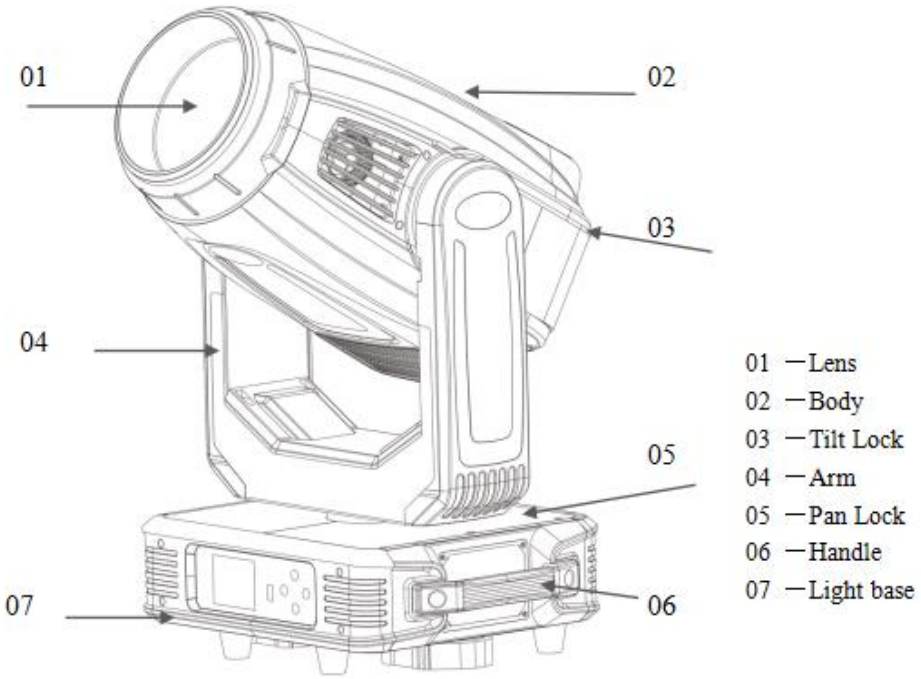

470W HYBRID WITH CMY each part of product structure and main composition product name description for better know the light unit.

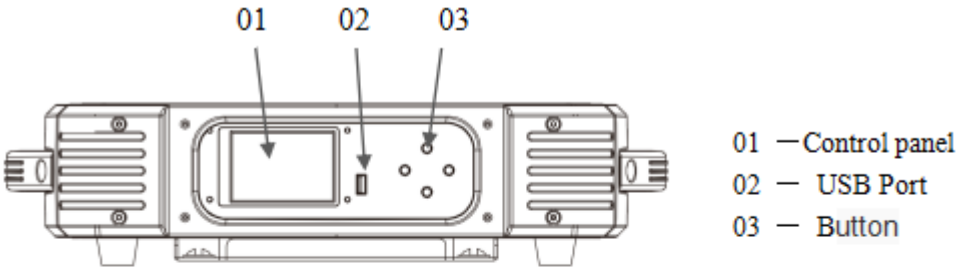

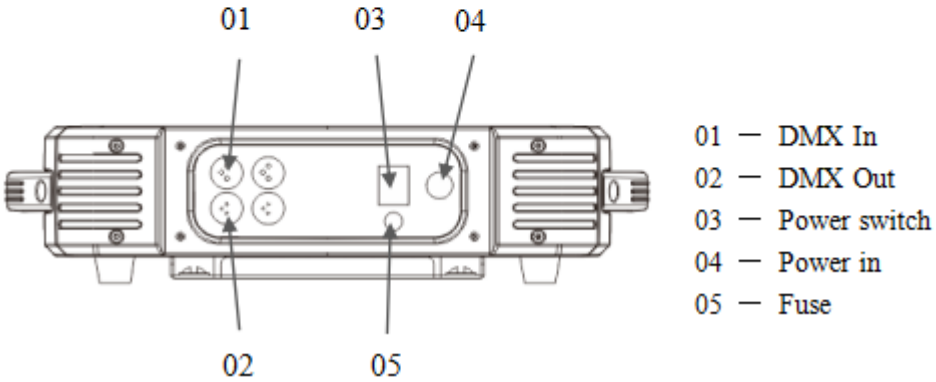

470W HYBRID WITH CMY Control panel function introduction, mark for the part name on the panel, familiar with the function of every part.

דנאור מערכות תאטרון ואולפנים בע"מ | 09-7444222 | sales@danor.com | www.danor.com | רח' הנגר 9, הוד השרון

4. COLOR AND GOBO DESCRIPTION

4.1 Color wheel with 11 colors (2700K+3200K)+white+CMY,pure colors,perfect effect;

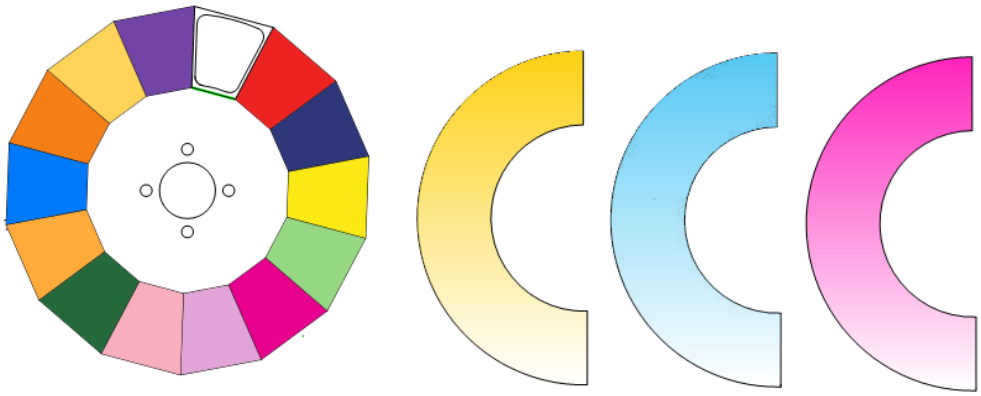

4.2 Static gobo wheel with 14gobos +white,rich gobos;

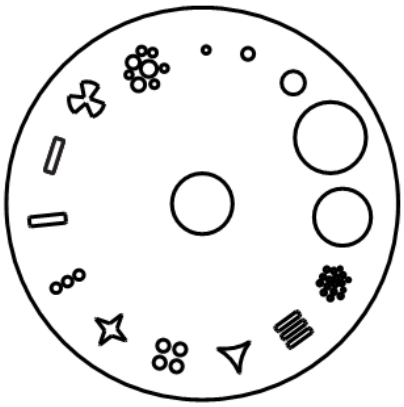

4.3 Rotate gobo wheel with 9gobos+white,smooth gobo rotation,replace easily;

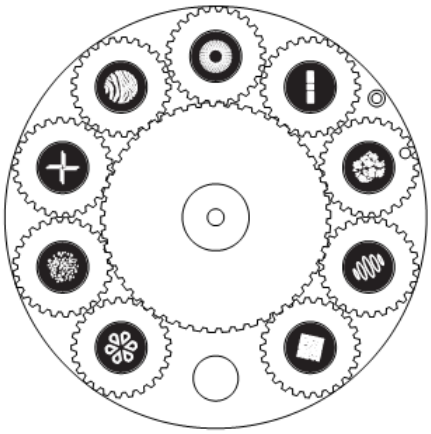

Two rotation prism, one 8 facet prism, one linear 4 prism, one fixed 16 prism,each two prism can combined using together. Frost function.

דנאור מערכות תאטרון ואולפנים בע"מ | 09-7444222 | sales@danor.com | www.danor.com | רח' הנגר 9, הוד השרון

5. SAFETY INFORMATION

5.1.1 Safety warning message.

1.This product is only suitable for professional use, and does not apply to security for other purposes.After you got the lights, please check the package whether have any damage caused by transportation. If there is any damage, do not use this fixture, and please contact the dealer or manufacturer as soon as possible.

3. This product is only suitable for indoor, IP20 protection class. Lamps should be kept dry to avoid Moisture, overheating or dusty environment. Prevent lamps come into contact with water or any other liquid.The use of this product should pay attention to: fire, heat, electric shock, ultraviolet radiation, the lamp to explode and so on .

Shedding caused serious or fatal injury. Need to read the instructions before use energized or installing. Follow through the operation of security methods and pay attention to the warning signs on the specification and equipment. If you have any problem for how to safely operate the equipment. Please contact your dealer.

5.1.2 ANTI-HIGH TEMPERATURE

ta =40°C

Please don't use the equipment if the temperature above 40℃

5.1.3 BURST PREVENTION

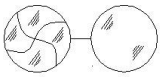

The lens should be changed if had damaged or any problems. Don't change the non-original manufacturer lens.

Len size：Φ158×43 mm

5.2 TO PREVENT FALLING WOUNDING

Please don't move the package by one person only.

When Hang the fixture, please must verify that the facilities to be able to withstand the weight of the lamps at least 10 times more.

Please make sure the Mounting hardware is strong enough no any damage, and insurance for the safety rope as auxiliary security fixed in other facilities will need to verify before installation. Installing or removing the equipment, to make the pulley below the work location.

5.3 UA PROTECTION AND THE BULB EXPLOSION

Prohibit straight viewpoint with exposed bulbs to avoid UV damage to the eyes;

Do not use the equipment without the lens screen and the lid;

The lens and the light head covers should be timely replaced if any damage to rupture

The Fixture should be used with the protection screen together.

דנאור מערכות תאטרון ואולפנים בע"מ | 4222 | sales@danor.cor | www.danor.com | רח' הנגר 9, הוד השרון

5.4.1 PREVENTION OF ELECTIC SHOCK

The electrical connection must only be carried out with corresponding qualifications;
Before installing, make sure you use the power voltage lamps must comply with the identified power, voltage and have an overload or leakage protection;
Each lamp must be properly grounded, installed in accordance with the relevant standa
Cut off the power when stall or replace the lamp and the
Prohibit the use of a lightning storm or wet environment.

5.4.2 TO PREVENT BURNING OR FIRE

1. The fixture can be mounted directly on the surface of ordinary combustible material. F
2. Do not short-circuit temperature protection switch or fuse, use the specified type of fuse.
3. The equipment must be installed away from inflammable and explosive materials.
4. The equipment should be projected range of 15 meters away objects and projectiles temperature less than 60 ° C 15m
5. Fan or ventilation, at least in the range of 0.5 meters can not be an obstacle.
6. Do not place any object on the lens.
7. Handling at least allow the device to cool for 20 minutes.
8. Do not replace the non-original parts.

6. PACKING AND SHIPPING

Packed with fly-case of two in one ,or carton box. Attach follow accessory.

6.1 ACCESSORY

CONTENT	QUANTITY
USER MANUAL	1
HANG FIXTURE	1
SIGNAL CABLE	1

6.2 TRANSPORT PROTECT LOCK

In order to protect the light, there is a protect lock; During the transport , the lock catch position need lock in the center, and the fixture keep in vertical state.

6.3 ABOUT PACKING

1. Before packed, make sure power is off, and wait for at least 20mins for cooling down.
2. Before clean the fixture, make sure X, Y axis protect lock closed.
3. After packed by plastic bag, high-lift the fixture with two handles besides the product. put

דנאור מערכות תאטרון ואולפנים בע"מ | 09-7444222 | sales@danor.com | www.danor.com | רח' הנגר 9, הוד השרון

the product into the fly-case up-side-down.

4. After packed the product, put the accessory into the accessory case, then closed and lock the fly-case.
5. Fly-case only up stacked two layers. Prohibited upside down
6. When packed with carton box, equipment should be put into the foam first, then set into a carton, pay attention to the vertical position.

6.4 UNPACKING

Note: Before unpacking check the damage is whether due to the transportation or not, if you find any such damage, please do not use this item, and contact with the dealer or manufacturer as soon as possible.

1. Open the fly-case, and discover the inside plastic bag.
2. High-lift the product by two handles beside the bottom base and move it out.
3. Before power on, make sure you have opened the X, Y axis lock!

7. INSTALLATION STANDARD

7.1 INSTALLATION RIGGING

The product can be placed on the stage or installed on the bracket in any direction. The quick lock system can quickly and easily press 2 directions to lock on the bracket.

7.2 DEVICE FIXED

1.Before installation, it must be verified that the rigging equipment clamp is not damaged and can bear at least 10 times of the weight of the equipment, and that the building can bear at least 10 times of the total weight of the equipment and the fixture fuse accessory equipment;

2.The fixture is installed on the base of the lamp body, the fastener is inserted horizontally into the mounting hole of the base, the handle of the fastener is grasped and rotated clockwise for 1 / 4 turn to lock, and other fasteners are installed in the same way.

3.Verify whether the horizontal and vertical locks have been opened, and verify that there are no inflammables or other nearby inflammables within 3 meters of the device.

7.3 Device connection

Attention!

Must use two clamps fix the fixture,and tighten the clamps with1/4 lock, only fully clockwise rotate 90 °then can lock the fasteners. Add one safety insurance rope on the hole of light base. pls attention not connect to the transport handle.

Attention! One product only can accept one input one output.DMX512 cable must use the professional shielded twisted pair cable; standard loudspeaker cable is not reliable to control the long-range data. 24AWG cable is suitable for more than 300 meters long-distance signal

דנאור מערכות תאטרון ואולפנים בע"מ | 09-7444222 | sales@danor.com | www.danor.com | רח' הנגר 9, הוד השרון

transmission and must add\ DMX 512 signal amplifier.
Do not use two outputs to separate the connection, if separate a continuous connection to branch, DMX512 splitter is necessary.
If use the DMX512 splitter. At first connect DMX512 Splitter input terminal to controller .And then connected from the splitter output terminal to next device.
Do as above guide to connect other device, and finally coupled with terminal insertion

8. AC POWER

8.1 VOLTAGE, POWER, FUSE SPECIFICATION

Input Voltage	Total Power	Frequency
110-240V	600W	50/60HZ

Fuse voltage	Electronic current	Specification
250V	10A	5×20

8.2 Power connection attention:

Attention!
The device must be operated by professionals; Make sure that the voltage of power supply must be comply with the voltage identified on the lamp, and must have an overload or leakage electrical protection.

Live wire(L)	Null(N)	Ground wire	
RED	BLUE	Yellow +Green	⏚

9. LAMP MODEL AND REPLACE

470W HYBRID WITH CMY LAMP

LAMP MODEL	POWER	LIFE/HOUR	LUMEN
OSRAM SIRIUS HRI 470W XL	470w	1500 HOURS	114900Lux

WARNING! There is a safety hazard or damage if install similar bulb To reduce the risk of damage to light ,do change the lamp before using time over 125% of lamp life .

LAMP REPLACE

Attention! When replace the lamp is forbidden to touch lamp with bare hand, to avoid the greasy dirt stains filament. filament must be kept clean. Disconnect the power. Before replace lamp, fixture need 20 minutes for lamp cooling. Fasten the head with Y axis protect lock in 60 ° position.

דנאור מערכות תאטרון ואולפנים בע"מ | 09-7444222 | sales@danor.com | www.danor.com | רח' הנגר 9, הוד השרון

1. Use cross screwdriver to open the light body cover(picture 1)

（1）

2. After open the cover,you can see the lamp inside,please wait the lamp be cool after used but not touch it in hot status.(picture 2)

（2）

3. One hand press the lamp holder,another hand hold the lamp,and pull out the wires(picture 3,4)

（3）

（4）

4.after take apart the lamp, please check the inside glasses, clear it will make the light better effect.(Picture 5)

（5）

5.install the lamp after replaced.

דנאור מערכות תאטרון ואולפנים בע"מ | 09-7444222 | sales@danor.com | www.danor.com | רח' הנגר 9, הוד השרון

10. CONTROL PANEL

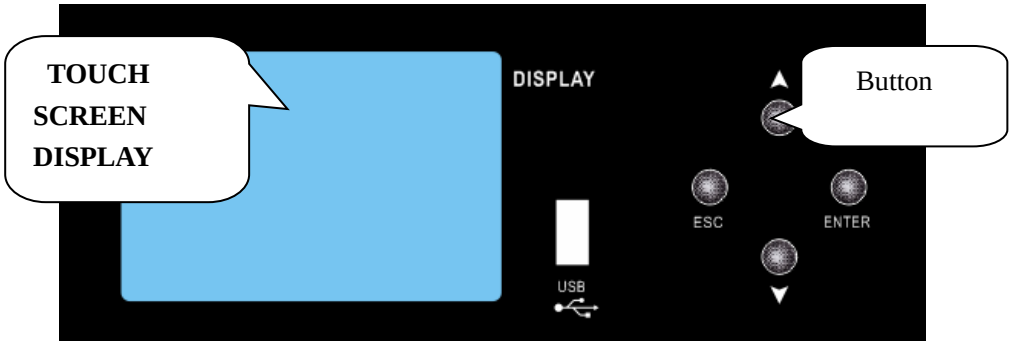

The control panel has a user friendly touch screen to display the operation data and other information.

There are four buttons on the right side.

Each button has a dedicate function.

Top button is for upward movement , lower button is for downward movement. The left button is for exiting the selected function where the right button in for confirming the function or data.

11. CONTROL PANEL MENU OPERATE

Main Menu	Submenu 1	Submenu2	Function SET	Function description
DMX ADDRESS	<<		**1-512**	to address 1
	<			address up
	>			address down
	<<			to address 512
			NEXT	Address up channels in this mode
			SAVE	save and back
			ESC	back
FEATURES SETTING	Wire Output:		**Open**	WDMX output on (custom function)）
			Close	WDMX output off (custom function)
	Wire Set:		**Hold**	WDMXSet up maintain (custom function)
			Clear	WDMX Set up delete (custom function)
	Channel		**34CH**	34CH mode

דנאור מערכות תאטרון ואולפנים בע"מ | 09-7444222 | sales@danor.com | www.danor.com | רח' הנגר 9, הוד השרון

	Mode:		**39CH**	39CH mode
	Pan Reverse:		**Off**	Pan Scan Normal
			On	Pan Scan Reverse
	Tilt Reverse:		**Off**	Tilt Scan Normal
			On	Tilt Scan Reverse
	Opto Check:		**Off**	Pan/Tilt optical sensor testing off
			On	Pan/Tilt optical sensor testing on
	PT Speed:		**Noml**	Pan/Tilt Scan Speed setting nomal
			Slow	Pan/Tilt Scan Speed setting slow
			Fast	Pan/Tilt Scan Speed setting fast
	Singl Clear:		**Off**	keep signal data
			On	clear signal data
	ECO MODE:		**Off**	Energy saving mode off
			On	Energy saving mode open
			ADV.	(ADVANCED FUNCTION)
			RST.	Re-setting and back
			SAVE	Save and back
			ESC	Back
ADVANCED FUNCTION	Redress	ZEROSETTING		
		Pan:	**0-255**	Adjust the begging state
		Tilt:		
		Focus:		
		Zoom:		
		Cyan:		
		Magenta:		
		Yellow:		
		Colour:		
		Static Gobo:		
		Rot Gobo:		
		GoboRot:		
		XGobo:		
		Dimmer:		
		Prism:		
		Prism Rot:		
		Prism2:		
		Prism2 Rot:		
		Frost:		
		Softern:		
			SAVE	Save and back
			>	Value+1

דנאור מערכות תאטרון ואולפנים בע"מ | 09-7444222 | sales@danor.com | www.danor.com | רח' הנגר 9, הוד השרון

			<	Value-1
			ESC	Back
	ChanlDef			No function
	FactSett			Only factory only
	UseManage	Limit	**LimitTime**	No function
			limitCont	No function
		DefConfig	**YES**	Return to default
			NO	back
		FacConfig	**SAVE**	Save and back
			EPRT	for factory only
			ESC	back
			ESC	back
UNLOCK	Verify1:		**0-255**	need password
	Verify2:			
			KEY	need password
			ESC	back
MANUAL	LAMP REST		**ALL MOTER**	All step motor(do not adjust it)
			XY MOTER	Pan/Tilt step motor adjust(do not adjust it)
			PART MOTER	Local motor
			YES	The chosen step motor reset
			ESC	Back
	TEST RUN	AUTO		Auto
		SOUND		Sound
			ESC	Back
	SMULATE DMX	Pan:	**0-255**	Control Channel on display
		Pan Fine:		
		Tilt:		
		Tilt Fine:		
		PT Speed:		
		Special Fun:		
		Cyan:		
		Magenta:		
		Yellow:		
		Colour:		
		Colour Fine:		
		Virtual Color		
		Effect Speed:		
		CMY Speed:		
		Beam Speed:		

דנאור מערכות תאטרון ואולפנים בע"מ | 09-7444222 | sales@danor.com | www.danor.com | רח' הנגר 9, הוד השרון

		Effect_W:		
		Effect_R:		
		Effect_A:		
		Static Gobo:		
		Rot Gobo:		
		Gobo Rot:		
		GRot Fine:		
		Prism1:		
		Prism1 Rot:		
		Prism2:		
		Prism2 Rot:		
		Pattern_S:		
		Pattern_R:		
		Beam_S:		
		Beam_R:		
		Frost:		
		Zoom:		
		Zoom Fine		
		Focus:		
		Focus Fine:		
		Aoto Focus:		
		Strobe:		
		Dimmer:		
		Dimmer Fine:		
			>	Value+1
			<	Value-1
			ESC	Back
	ESC			Back
SYSTEM INFO	DMX VALUE	CH00-CH39	**0-255**	DMX value number
	REST INFO	Pan:	**Right/Erro**	Motor reset status
		Tilt:		
		Focus:		
		Zoom:		
		Colour:		
		Static Gobo:		
		Rot Gobo:		
		Gobo Rot:		
		Prism:		
		Prism Rot:		
		Beam:		
		Beam Rot:		

דנאור מערכות תאטרון ואולפנים בע"מ | 09-7444222 | sales@danor.com | www.danor.com | רח' הנגר 9, הוד השרון

			ESC	Back
	OTHER INFO	LightType:	**470W HYBRID WITH CMY**	Device model
		Run Time:	**0-99999**	Machine runing hours
		Run Count:	**0-99999**	Machine runing times
		Fan 1:	**0-9999**	Fan 1 speed
		Fan 2:	**0-9999**	Fan 2 speed
		Temp:	**xxx**	Deceive temperature
		DisVersion:	**Vxxx**	Version of display software
		XY Version:	**Vxxx**	Version of Pan/Tilt software
		M1 Version:	**Vxxx**	Software Version M1
		M2 Version:	**Vxxx**	Software Version M2
			ESC	Back
	ESC			Back
DISPLAY SETTING	Light Set:		**1-7Lev**	Back Ground light level
	Light Off:		**On**	Keep back ground light on
			1Min	Back light turn off after 1 min
			2Min	Back light turn off after 2 mins
			3Min	Back light turn off after 3 mins
	Menu Back:		**Off**	Turn off the menu and back
			1Min	Menu back after 1 min
			2Min	Menu back after 2 mins
			3Min	Menu back after 3 mins
	Light Flash:		**Off**	Back ground light flash function off
			On	Back ground light flash function on
	Touch Cali:		**Off**	Touch screen calibration off
			On	Touch screen calibration on
			SAVE	Save and back
			ESC	Back
LAMP SETTING	DeviceID		**0-FFFFFFFF**	RDM address
	LampTime		**0000-9999**	Lamp time
	Manual Lamp:		**Off**	Lamp off by manual
			On	lamp on by manual
	LampState		**Off**	Lamp off
			On	Lamp on
	Lamp Off:		**10M**	After 10 mins no signal come in,

דנאור מערכות תאטרון ואולפנים בע"מ | 09-7444222 | sales@danor.com | www.danor.com | רח' הנגר 9, הוד השרון

				Lamp off
			Off	No signal come in , lamp keep lighting
	Lamp Default:		**Off**	Lamp off
			On	Lamp on
	Angle Cail:		**Off**	Turn off lamp angle calibration
			On	Turn on lamp angle calibration

12.DMX Channels

XMLIET 470W HYBRID WITH CMY Channels				
34 CH	39 CH	Function	DMX	DMX
1	1	Pan rotate	0-255	0~540°
2	2	Pan fine	0-255	Pan Fine
3	3	Tilt rotate	0-255	0~235°
4	4	Tilt fine	0-255	Tilt fine
5	5	P/T Speed	0-255	P/T Speed from far to slow
6	6	Function description	0-39	—
			40-44	ECO Model (380W)
			45-49	Standard moded (470W)
			50-129	—
			130-139	Lamp on
			140-149	PT Reset
			150-159	—
			160-169	Small Step Motor Reset
			170-199	—
			200-209	All the small step motor Reset
			210-229	—
			230-239	Lamp Off
			240-255	—
7	7	Cyan	0-255	light cyan
8	8	Magenta	0-255	light magenta
9	9	Yellow	0-255	light yellow
			0	White
			1-127	Color gradation
			128-129	WHite
			130-134	GOBO 1
			135-138	GOBO 2
			139-143	GOBO 3
			144-147	GOBO 4
			148-152	GOBO 5

דנאור מערכות תאטרון ואולפנים בע"מ | 09-7444222 | sales@danor.com | www.danor.com | רח' הנגר 9, הוד השרון

10	10	Color wheel	153-157	GOBO 6
			158-161	GOBO 7
			162-166	GOBO 8
			167-171	GOBO 9
			172-176	GOBO 10
			177-180	GOBO 11
			181-185	GOBO 12
			186-189	GOBO 13
			190-215	Clockwise flow from fast to slo
			216-217	Stop
			218-243	Anti - clockwise flow from slow to fa
			244-249	Sound control color
			250-255	Radom color
*	11	Color wheel fine	0-255	—
			0	—
11	12	Color macro	1-2	Macro 1
			3-4	Macro 2
			…	…
			129-130	Macro 65
			131-132	Macro 66
			133-255	—
12	13	CMY Speed	0-255	—
13	14	Color macro speed	0-255	—
14	15	Beam speed	0-255	—
15	16	Effect wheel	0—19	—
			20-127	lndex (open-full)
			128-170	Strobe (open-full) fast to slow.
			171-213	Strobe (open-half) fast to slow.
			314-255	Strobe (half-full) fast to slow.
16	17	Effect wheel rotation	0	Stop
			1-127	Clockwise flow from fast to slow.
			128	Stop
			129-255	Anti - clockwise flow from slow to fast.
17	18	Effect macro	0-255	—
			0-3	Hole
			4-9	GOBO 1
			10-15	GOBO 2
			16-21	GOBO 3
			22-27	GOBO 4
			28-33	GOBO 5
			34-39	GOBO 6
			40-45	GOBO 7
			46-51	GOBO 8

דנאור מערכות תאטרון ואולפנים בע"מ | 09-7444222 | sales@danor.com | www.danor.com | רח' הנגר 9, הוד השרון

18	19	Fixed GOBO	52-57	GOBO 9
			58-63	GOBO 10
			64-69	GOBO 11
			70-75	Slim Beam 1
			76-81	Slim Beam 2
			82-87	Slim Beam 3
			88-95	GOBO 1 shake
			96-103	GOBO 2 shake
			104-111	GOBO 3 shake
			112-119	GOBO 4 shake
			120-127	GOBO 5 shake
			128-135	GOBO 6 shake
			136-143	GOBO 7 shake
			144-151	GOBO 8 shake
			152-159	GOBO 9 shake
			160-167	GOBO 10 shake
			168-175	GOBO 11 shake
			176-183	Slim Beam 1 shake
			184-191	Slim Beam 2 shake
			192-199	Slim Beam 3 shake
			200-201	Hole
			202-222	Clockwise flow from fast to slow.
			223-243	Anti - clockwise flow from slow to fa
			244-249	Sound control GOBO
			250-255	Random GOBO
			0	—
			1—4	Maximal hole
			GOBO positioning（GOBO rotation index mode)	
			5—7	GOBO 1
			8—10	GOBO 2
			11—13	GOBO 3
			14—16	GOBO 4
			17—19	GOBO 5
			20—22	GOBO 6
			23—25	GOBO 7
			26—28	GOBO 8
			29—31	GOBO 9
			GOBO positioning (GOBO rotation mode)	
			32—34	GOBO 1
			35—37	GOBO 2
			38—40	GOBO 3
			41—43	GOBO 4
			44—46	GOBO 5
			47—49	GOBO 6

דנאור מערכות תאטרון ואולפנים בע"מ | 09-7444222 | sales@danor.com | www.danor.com | רח' הנגר 9, הוד השרון

19	20	Rotation GOBO	50－52	GOBO 7
			53－55	GOBO 8
			56－59	GOBO 9
			GOBO shake form slow to fast （GOBO rotation index mode）	
			60－67	GOBO 1 shake
			68－75	GOBO 2 shake
			76－83	GOBO 3 shake
			84－91	GOBO 4 shake
			92－99	GOBO 5 shake
			100－107	GOBO 6 shake
			108－115	GOBO 7 shake
			116－123	GOBO 8 shake
			124－129	GOBO 9 shake
			GOBO shake from slow to fast (GOBO rotation mode.	
			130－137	GOBO 1 shake
			138－145	GOBO 2 shake
			146－153	GOBO 3 shake
			154－161	GOBO 4 shake
			162－169	GOBO 5 shake
			170－177	GOBO 6 shake
			178－185	GOBO 7 shake
			186－193	GOBO 8 shake
			194－199	GOBO 9 shake
			200－201	Maximal hole
			202－222	Clockwise flow from fast to slow.
			223－243	Anti - clockwise flow from slow to fast.
			244－249	Sound control GOBO
			250－255	Random GOBO
20	21	Rotation GOBO	GOBO rotation index mode.	
			0-255	Index
			GOBO rotation index mode.	
			0	Stop
			1－127	Anti - clockwise flow from slow to fast
			128	Stop
			129－255	Clockwise flow from fast to slow.
*	22	Rotation GOBO fine	0－255	—
21	23	Prism whee1	0-3	—
			Index mode	
			4-7	Prism 1
			8-11	Prism 2
			12-15	Prism 3
			Rotation mode	
			16-19	Prism 1

דנאור מערכות תאטרון ואולפנים בע"מ | 09-7444222 | sales@danor.com | www.danor.com | רח' הנגר 9, הוד השרון

			20-23	Prism 2
			24-255	Prism 3
22	24	Prism 1 Rotation	Index mode	
			0-255	Index
			Rotation mode	
			0	Stop
			1—127	Clockwise flow from fast to slo
			128	Stop
			129—255	Anti - clockwise flow from slow to fa
23	25	Prism whee1 2	0-3	—
			Index mode	
			4-7	Prism 1
			8-11	Prism 2
			12-15	Prism 3
			Rotation mode	
			16-19	Prism 1
			20-23	Prism 2
			24-255	Prism 3
24	26	Prism 2 Rotation	Index mode	
			0-255	Index
			Rotation mode	
			0	Stop
			1—127	Clockwise flow from fast to slo
			128	Stop
			129—255	Anti - clockwise flow from slow to fa
25	27	Prism macro 1	0-3	—
			Index mode	
			4-5	Macro 1
			6-7	Macro 2
			…	…
			24-25	Macro 11
			26-27	Macro 12
			Rotation mode	
			28-29	Macro 1
			30-31	Macro 2
			…	…
			64-65	Macro 19
			66-67	Macro 20
			68-255	—
26	28	Prism macro 1 Rotation	Index mode	
			0-255	Index
			Rotation mode	
			0	Stop
			1—127	Clockwise flow from fast to slo
			128	Stop

דנאור מערכות תאטרון ואולפנים בע"מ | 09-7444222 | sales@danor.com | www.danor.com | רח' הנגר 9, הוד השרון

			129—255	Anti - clockwise flow from slow to fa
27	29	Prism macro 2	0-3	—
			Index mode	
			4-7	Macro 1
			8-11	Macro 2
			12-15	Macro 3
			16-19	Macro 4
			Rotation mode	
			20-23	Macro 1
			24-27	Macro 2
			28-31	Macro 3
			32-35	Macro 4
			36-255	—
28	30	Prism macro 2 Rotation	Index mode	
			0-255	Index
			Rotation mode	
			0	Stop
			1—127	Clockwise flow from fast to slo
			128	Stop
			129—255	Anti - clockwise flow from slow to fa
29	31	Frost	0	—
			1-50	Linear frost
			51-53	Frost open
			54-63	From fast to slow,slow close fast
			64-73	From slow to fast,fast open slowclose
			74-83	From fast to slow,slow close fast
			84-255	Frost open
30	32	Zoom	0-255	Zoom
			84-255	Frost open
30	32	Zoom	0-255	Zoom
*	33	Zoom fine	0—255	Zoom fine
31	34	Focus	0—255	Focus
*	35	Focus fine	0—255	Focus fine
32	36	Auto focus	0—255	—
33	37	Strobe	0—31	Strobe Close
			32—63	Storbe Open
			64—95	Strobe form slow to fast.
			96—127	Strobe Open
			128—143	From fast to slow,slow close fast
			144—159	From slow to fast,fast open slow
			160—191	Strobe Open
34	38	Dimmer	192—223	Random strobe from slow to
*	39	Dimmer fine	224—255	Strobe Open
34	38	Dimmer	0-255	Dimmer

דנאור מערכות תאטרון ואולפנים בע"מ | 09-7444222 | sales@danor.com | www.danor.com | רח' הנגר 9, הוד השרון

*	39	Dimmer fine	0-255	Linear Dimmer

13.ROUTINE MAINTENANCE

CLEANING AND MAINTENANCE

WARNING!

1、Turn off the power before opening any cover.

2、After the power supply is broken, the bottom is cooled and the lid is opened.

3、Dust or floats can be blown gently with a vacuum cleaner or a pressure blow machine.

14.SIMPLE TROUBLESHOOTING

1.The whole device reacts... 1) first check whether the power fuse is normal, 2) check whether the output of switching power supply is normal, and the normal output of switching power supply is 27V.

2.If a one - way function is not normal... First, find the driving plug of the circuit board of this road, and change the two adjacent drive motor plugs to check out the problem of the board or the wiring or the motor.

3.If a one - way function is not normal... First, find the driving plug of the circuit board of this road, and change the two adjacent drive motor plugs to check out the problem of the board or the wiring or the motor.

4.If a few road function work is not normal... In general, a chip controls several drives at the same time, so it is possible that the chip is abnormal.

דנאור מערכות תאטרון ואולפנים בע"מ | 09-7444222 | sales@danor.com | www.danor.com | רח' הנגר 9, הוד השרון